INSTRUCTION MANUAL
D2xC2LD2 Alarm Horn and LED
For use in Hazardous Locations

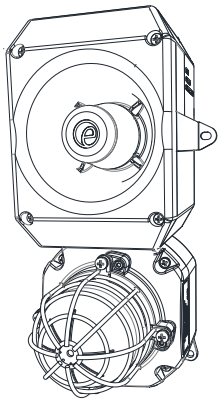

D2XC2LD2

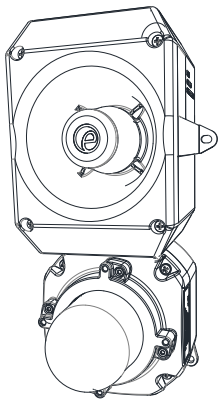

D2XC2LD2-H

1) Product Table

Model	Nominal Voltage	Beacon Current	Sounder Current
D2xC2LD2DC024	24Vdc	346mA	313mA
D2XC2LD2DC024 -H#	24Vdc	346mA	313mA
D2xC2LD2DC048	48Vdc	115mA	218mA
D2xC2LD2AC115	115-120Vac 50/60Hz	102.4mA	91mA
D2xC2LD2AC230	220-230Vac 50/60Hz	75mA	72mA
#D2xC2LD2-H public mode Alarm Horn & LED (Product Version H). See Section 3.1 For detailed max current ratings of the device please see Section 16			
Table 1: Electrical Ratings			

2) Warnings

- DO NOT OPEN WHEN AN EXPLOSIVE ATMOSPHERE IS PRESENT
- DO NOT OPEN WHEN ENERGISED
- POTENTIAL ELECTROSTATIC CHARGING HAZARD - CLEAN ONLY WITH A DAMP CLOTH

Avertissement:

- NE PAS OUVRIR UN PRESENCE D'ATMOSPHERE EXPLOSIVE
- NE PAS OUVRIR ENERGIE
- DANGER POTENTIEL CHARGE ÉLECTROSTATIQUE - NETTOYER UNIQUEMENT AVEC UN CHIFFON HUMIDE

3) Rating & Marking Information

3.1. Fire Alarm Ratings

The D2xC2LD2DC024 is approved for use as Audible and Visual Appliance for use in Fire Alarm Systems – Private Mode and General Signalling.

The D2xC2LD2DC024 Product Version H (D2xC2LD2-H) is certified for use as a public mode audible and visual alarm device in accordance with UL464 & UL1971 / UL1638. For use in public mode the beacon must be without the wire guard or plastic lens cover.

See fire instruction manual D211-00-611-IS-SC-UL

3.2. ATEX / IECEx / UKEx certification

Standards	
EN IEC 60079-0:2018 / IEC60079-0:2017 (Ed 7): Explosive Atmospheres - Equipment. General Requirements EN IEC 60079-7:2015 +A1:2018 / IEC 60079-7:2018 (Ed. 5.1): Explosive Atmospheres - Equipment Protection by Increased Safety "e" EN 60079-31:2014 / IEC 60079-31:2013 (Ed 2): Explosive Atmospheres - Equipment Dust Ignition Protection by Enclosure "t"	
Ratings	
D2xC2LD2	Ex ec IIC T4 Gc Ta -40°C to +50°C Ex tc IIIC T75°C Dc Ta -40°C to +50°C

Certificate No.	DEMKO 14 ATEX 4786493904X IECEx ULD 14.0004X UL21UKEX2131X
ATEX Mark, Equipment Group and Category:	**II 3G** **II 3D**
CE Marking	
UKCA Marking	

3.3. NEC & CEC Ratings

NEC & CEC Class / Division Ratings for US / Canada

Standards	
UL 121201-2021 (Ed. 9) CAN/CSA C22.2 No. 213-17 (Ed. 3)	
Ratings	
D2xC2LD2	Class I Div 2 ABCD T4 Ta -40°C to +50°C Class I Div 2 ABCD T4A Ta -40°C to +40°C Class II Div 2 FG T6 Ta -40°C to +50°C Class III Div 1&2 Ta -40°C to +50°C
Installation must be carried out in compliance with the National Electric Code / Canadian Electric Code	

NEC Class / Zone ratings US

Standards	
UL 60079-0 (Ed. 7): Explosive Atmospheres - part 0: Equipment - General Requirements UL 60079-7 (Ed. 5): Explosive Atmospheres - Equipment Protection by Increased Safety "e" UL 60079-31 (Ed. 2) Explosive Atmospheres - Equipment Dust Ignition Protection by Enclosure "t"	
Ratings	
D2xC2LD2	Class I Zone 2 AEx ec IIC Gc T4 Ta -40°C to +50°C AEx tc IIIC T75°C Dc Ta -40°C to +50°C
Installation must be carried out in compliance with the National Electric Code.	

CEC Class / Zone ratings Canada

Standards	
CAN/CSA C22.2 No. 60079-0 (Ed. 4) 02/2019 Explosive Atmospheres - Part 0: Equipment - General Requirements CAN/CSA C22.2 No. 60079-7 (Ed. 2) Explosive Atmospheres - Equipment Protection by Increased Safety "e" CAN/CSA C22.2 No. 60079-31 (Ed. 2) Explosive Atmospheres - Equipment Dust Ignition Protection by Enclosure "t"	
Rating	
D2xB1LD2	Ex ec IIC Gc X T4 Ta -40°C to +50°C Ex tc IIIC T75°C Dc X Ta -20°C to +50°C
Installation must be carried out in compliance with the Canadian Electric Code	

4) Zones, Gas / Dust Groups and Temperature Classification

Area Classification	
Zone 2	Explosive gas air mixture not likely to occur in normal operation, and if it does, it will only exist for a short time.
Zone 22	Explosive dust air mixture not likely to occur in normal operation, and if it does, it will only exist for a short time.
Gas Groupings	
Group IIA	Propane
Group IIB	Ethylene
Group IIC	Hydrogen and Acetylene
Temperature Classification for Gas Applications	
T1	450ºC
T2	300ºC
T3	200ºC
T4	135°C
Dust Groupings (ATEX / IECEx / UKEX only)	
Group IIIA	Combustible Flyings
Group IIIB	Non-conductive Dust
Group IIIC	Conductive Dust
Maximum Surface Temperature for Dust Applications (ATEX / IECEx / UKEX only)	
D2xC2LD2	75°C
Equipment Category	
3G / 3D	
Equipment Level Protection	
Gc, Dc	
Ambient Temperature Range	
-40°C to +50°C	
IP Rating	
IP6X to EN/IEC60079-0 IP66 to EN60529 To maintain the ingress protection rating, the two off cable entries must be fitted with suitably rated, certified cable entry and/or blanking devices during installation.	
Type Rating	
Per UL50E / NEMA250: 4 / 4X / 3R / 13	

Installation must be carried out in compliance with the latest issue of the following standards:

EN60079-14 / IEC60079-14: Explosive atmospheres - Electrical installations design, selection and erection
EN60079-10-1 / IEC60079-10-1: Explosive atmospheres - Classification of areas. Explosive gas atmospheres
EN60079-10-2 / IEC60079-10-2: Explosive atmospheres – Classification of areas. Explosive dust atmospheres

5) Special Conditions for Safe Use

Special Condition for safe Use as stated on the Type Examination Certificate DEMKO 14 ATEX 4786493904X / CoC IECEx ULD 14.0004X / UL21UKEX2131X:

When used for a Group III application, the surface of the enclosure may store electrostatic charge and become a source of ignition in applications with a low relative humidity <~30%

relative humidity where the surface is relatively free of surface contamination such as dirt, dust, or oil.

Guidance on protection against the risk of ignition due to electrostatic discharge can be found in EN TR50404 and IEC TR60079-32.

End user shall adhere to the manufacturer's installation and instruction when performing housekeeping to avoid the potential for hazardous electrostatic charges during cleaning, by using a damp cloth.

To maintain the ingress protection rating and mode of protection, the cable entries must be fitted with suitably rated, certified cable entry and/or blanking devices during installation.

The equipment shall only be used in an area of at least pollution degree 2, as defined in IEC 60664-1.

6) Product Mounting and Access

6.1. Location and Mounting

The location of the combined alarm horn and beacon should be made with due regard to the area over which the warning signal must be visible and audible. It should only be fixed to services that can carry the weight of the unit.

DxC2 Alarm Horn and Strobe to a flat surface via the two 9.7 x 6.7mm, 147mm pitch fixing holes in the mounting feet of the sounder section and the two 7mm fixing holes in the feet of the base.
The equipment is not to be mounted with the horn facing upwards.

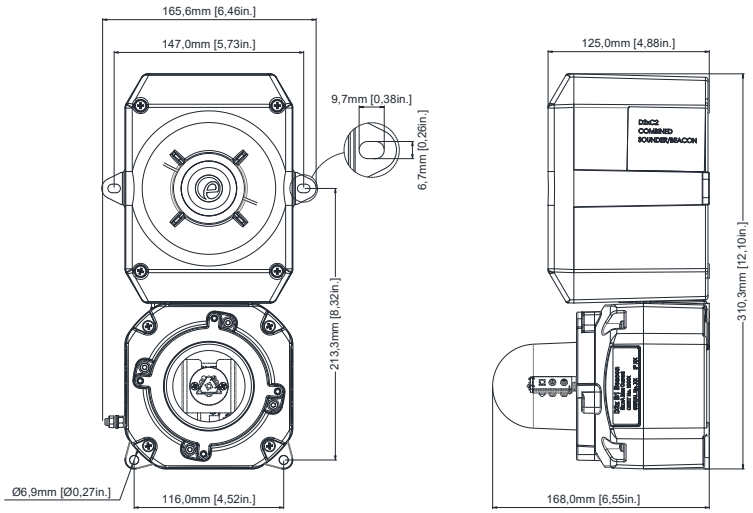

Fig. 1a Fixing locations Public Mode Alarm.

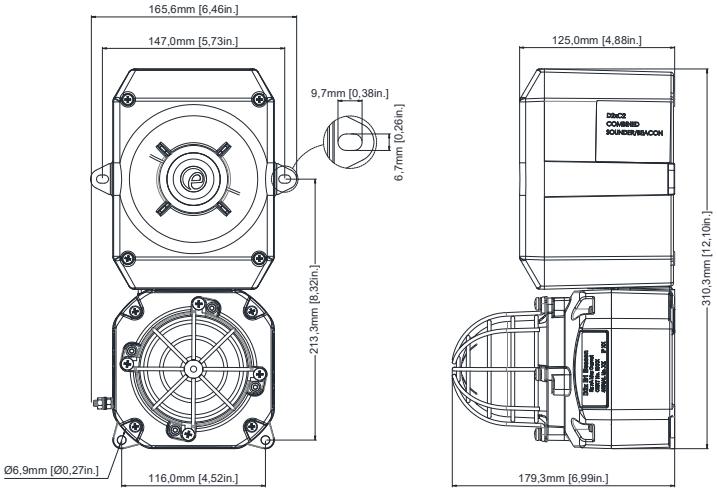

Fig. 1b Fixing locations Private Mode Alarm.

6.2. Access to the Enclosure

Warning – High voltage may be present, risk of electric shock.
DO NOT open when energised, disconnect power before opening.

Warning – Hot surfaces. External surfaces and internal components may be hot after operation, take care when handling the equipment.

To access the enclosure, loosen the four M4 posi pan head screws and withdraw the cover

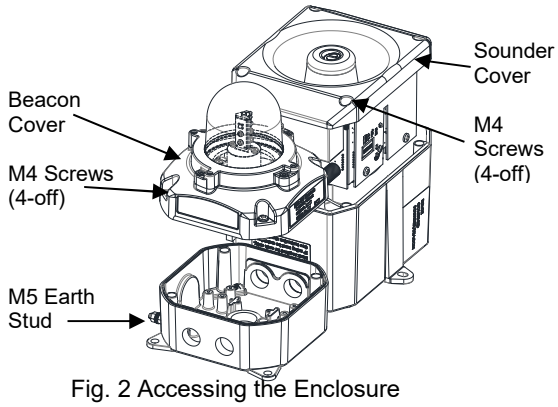

Fig. 2 Accessing the Enclosure

To replace cover, check that the 'O' ring seal is in place. Carefully push the cover in place. Insert M4 screws with fiber washers and tighten to 3Nm torque.

7) Selection of Cable, Cable Glands, Blanking Elements & Adapters

When selecting the cable size, consideration must be given to the input current that each unit draws (see Table 1), the number of beacons on the line and the length of the cable runs. The cable size selected must have the necessary capacity to provide the input current to all of the sounders connected to the line.

When selecting the cable size consideration must be given to the voltage drop over the length of the cable run to ensure the min. input voltage at the point of use (voltage range, see section 16)

The voltage drop depends on:

- The total current draw if the devices installed on this cable run
- The wire size and total length of the cable run, determining the total resistance of this cable run
- The minimum output voltage supplied by the power supply

The voltage drop and input voltage at the point of use can be calculated as follows:

Total Wire resistance =
Wire resistance / 1000ft x length of cable run x 2

(length of cable run needs to be multiplied by two to account for two wires going to and from the unit)

Total current draw =
Current draw per unit x number of units

Voltage Drop = Total current draw x Total wire resistance

Minimum output of power supply =
Min. voltage at point of use + voltage drop

For ambient temperatures over +45ºC the cable entry temperature may exceed +70ºC. Therefore suitable heat resisting cables and cable glands, rated to min. 75ºC must be used.

If a high IP (Ingress Protection) rating is required then a suitable sealing washer must be fitted under the cable glands or blanking plugs.

For use in explosive dust atmospheres, a minimum ingress protection rating of IP6X must be maintained.

For use in explosive gas atmospheres, a minimum ingress protection rating of IP54 must be maintained.

NPT plugs should be greased before insertion.

8) Cable Connections

Electrical connections are to be made into the terminal blocks on the PCBA located in the enclosure. See section 6 of this manual for access to the enclosure.

Wires having a cross sectional area between 0.5 mm² to 2.5mm² can be connected to each terminal way. If an input and output wire is required the 2-off Live/Neutral or +/- terminals can be used. If fitting 2-off wires to one terminal way the sum of the 2-off wires must be a maximum cross sectional area of 2.5mm². Strip wires to 8mm. Wires may also be fitted using ferrules. Terminal screws need to be tightened down with a tightening torque of 0.56 Nm / 5 Lb-in. When connecting wires to the terminals great care should be taken to dress the wires so that when the cover is inserted into the chamber the wires do not exert excess pressure on the terminal blocks. This is particularly important when using cables with large cross sectional areas such as 2.5mm².

9) AC Wiring

The Strobe is powered via factory installed wires connected to the sounder. The wires connecting the alarm horn and strobe can be removed if the user wishes to power the strobe separately.
For further wiring schematics refer to document D211-06-611

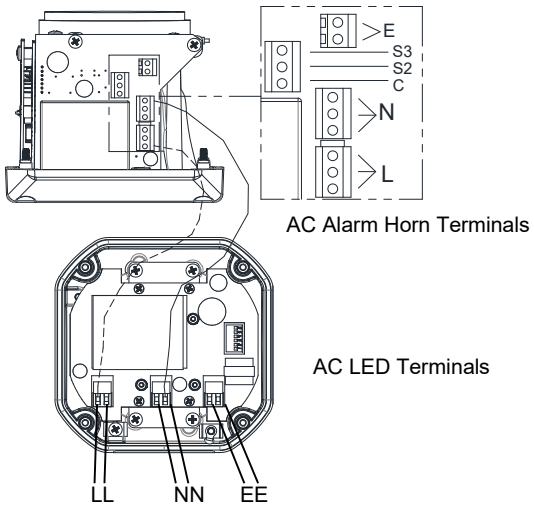

Fig 4. AC Terminals

10) DC Wiring

The Strobe is powered via factory installed wires connected to the alarm horn. The wires connecting the alarm horn and strobe can be removed if the user wishes to power the strobe separately.
For further wiring schematics refer to document D211-06-611

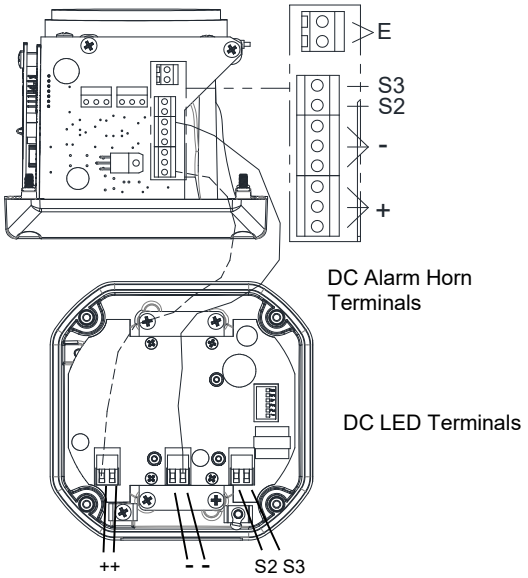

Fig. 6 DC Terminals

11) Earthing

The unit has both internal and external earth terminals, (please see fig 2).
Internal earthing connections should be made to the internal earth terminal on the PCBA, (please see fig 4 for AC, fig 6 for DC). The earth conductor should be at least equal in size and rating to the incoming power conductors. The internal earth bonding wire connects the PCBA earth terminal to the internal earth terminal in the enclosure back box.

External earth connections should be made to the M5 earth stud, using a ring crimp terminal to secure the earth conductor to the earth stud. The external earth conductor should be at least 4mm^2 in size. The external earth crimp ring should be located between the two M5 plain washers provided and securely locked down with the M5 spring washer and M5 nut.

12) End Of Line Monitoring (DC Units Only)

On DxC2 DC units, dc reverse line monitoring can be used if required. All DC units have a blocking diode fitted in their supply input lines. An end of line monitoring resistor can be connected across the +ve and –ve terminals. If an end of line resistor is used it must have the following values:-

	Min. Resistance	Min. Power
24V DC	3.9KΩ	0.5W
	1KΩ	2W
48V DC	15KΩ	0.5W
	3.9KΩ	2W

The resistor must be connected directly across the +ve and -ve terminals of the sounder board, as shown in the following drawing. Whilst keeping its leads as short as possible, a spacing of at least 1/16 inch (1.58mm) must be provided through air and over surfaces between uninsulated live parts.

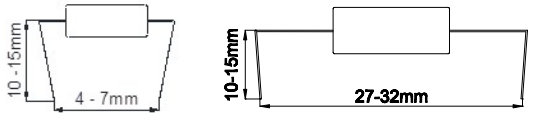

Sounder EOL Beacon EOL

Fig. 7 End of Line Resistor Forming

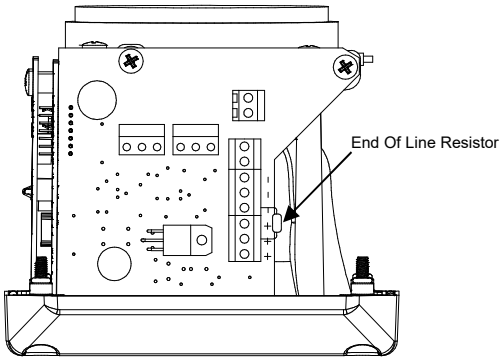

Fig. 8a End of Line Resistor Placement – Sounder

For the Beacon, the resistor must be connected directly across the +ve and -ve terminals as shown in the following drawing. Form the resistor legs as shown in Fig. 7, remove the +ve and –ve terminal plugs and fit the resistor across the two terminal plugs before refitting them to the PCBA as shown in Fig. 8. A spacing of at least 1/16" (1.58mm) must be provided through air and over surfaces between uninsulated live parts.

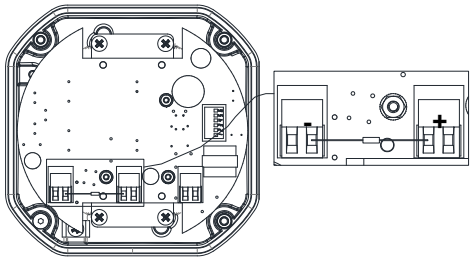

Fig. 8b End of Line Resistor Placement – Beacon

13) Setting

13.1. Volume Control

The alarm horn output level of the DxC2 unit can be set by adjusting the volume control potentiometer (see Fig 2). For maximum output, set the potentiometer fully clockwise.

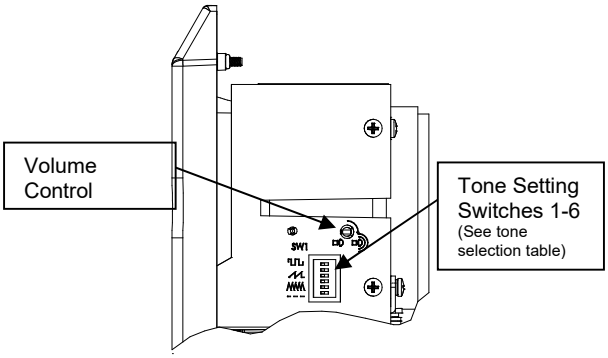

Fig. 9 Location of field controls

13.2. Tone Selection

The DxC2 alarm horns have 64 different tones. The tones are selected by operation of the tone setting DIP switches (see Fig. 2) on the PCB. The alarm horns can also be switched to sound the second, third and fourth stage alarm tones. The tone table (Table 1) shows the switch positions for the 64 tone and which tones are available for the second, third and fourth stages.

13.3. Flash Rate Setting

Warning – high-intensity light source. Avoid looking directly at the light source for extended periods of time.

The D2xC2LD2 beacons can produce different flash patterns as shown in Table 1. The flash patterns are selected by operation of the flash setting DIP switch on the PCB, Fig 6.

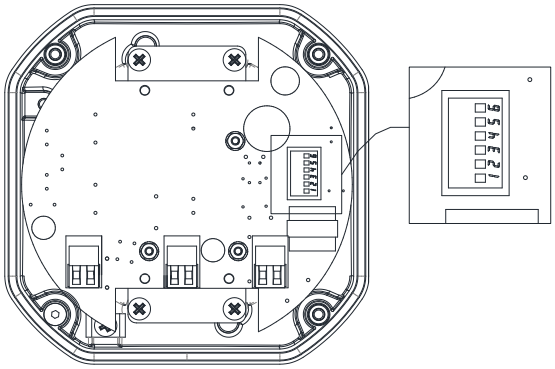

Fig. 10: DIP Switch Location

Switch Setting	S1 Mode	S2 Mode	S3 Mode
(123456)	(DC & AC)	(DC Only)	(DC Only)
000000	Steady High Power	Flashing 1Hz*	Flashing Triple Strike
000001	Steady Low Power	Flashing 1Hz*	Flashing Triple Strike
100000	Flashing 1Hz*	Flashing Double Strike	Flashing Triple Strike
101000	Flashing 1.33Hz*	Flashing 2Hz*	Flashing Double Strike
010000	Flashing 2Hz*	Flashing Triple Strike	Flashing Triple Strike
110000	Flashing Double Strike	Steady High Power	Flashing Triple Strike
001000	Flashing Triple Strike	Flashing 2Hz*	Flashing Double Strike

Table 1: Switch Positions for Flash Patterns

(*setting permitted for use as public mode fire alarm device)

Fig. 11 Dip Switch

1=ON; 0=OFF
Example shown: 100000 = Flashing 1Hz (Default setting

14) Interchangeable & Spare Parts

Warning – Hot surfaces. External surfaces and internal components may be hot after operation, take care when handling the equipment.

The Beacon lens cover is interchangeable, contact E2S Ltd for a replacement lens cover available in various colours. Please note that Private Mode Fire Alarm units can only be used with either clear or red lenses, Public Mode Fire Alarm units cannot be used with a lens or a guard.

To change the lens cover, unscrew the 4-off M5 posi pan head screws, spring and flat washers using a screwdriver. Remove the wire guard and replace the old lens cover with the new lens cover.

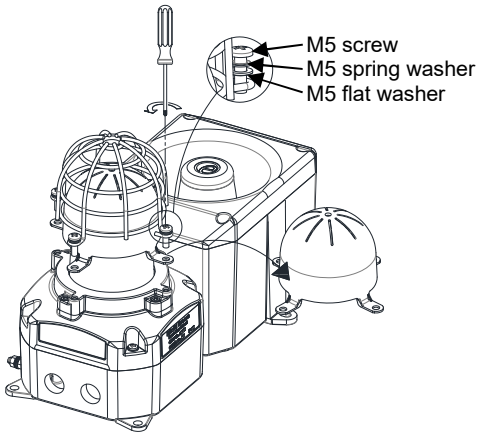

Fig. 12 Replacement of beacon lens cover

Fit the wire guard back onto the housing, over the new lens cover aligning the fixing holes of the guard, lens cover and housing. Refit the fixings to hold into place, the fixings MUST be fitted in the order shown above.

15) Maintenance, Overhaul & Repair

Maintenance, repair and overhaul of the equipment should only be carried out by suitably qualified personnel in accordance with the current relevant standards:

IEC/EN60079-19 Explosive atmospheres - Equipment repair, overhaul and reclamation
IEC/EN60079-17 Explosive atmospheres - Electrical installations inspection and maintenance

To avoid a possible ELECTROSTACTIC CHARGE the unit must only be cleaned with a damp cloth.

Units must not be opened while an explosive atmosphere is present. If opening the unit during maintenance operations a clean environment must be maintained and any dust layer removed prior to opening the unit.

16) Electrical Ratings

16.1 Operating current Consumption

Table 2 – Electrical Ratings							
Model	**Nom. Voltage**	**Voltage Range**	**Flash Rate Setting**	**Nom. operating current#**		**Max. operating current##**	
				Beacon	Sounder	Beacon	Sounder
D2xC2LD2DC024 and D2xC2LD2-H	24Vdc	Regulated 24 (16-33Vdc)	Steady High Power	242mA	313mA	346mA	313mA
			Steady Low Power	128mA		184mA	
			Flashing 1Hz*	99.5mA		147mA	
			Flashing 1.33Hz*	104mA		143mA	
			Flashing 2Hz*	103mA		146mA	
			Flashing Double Strike	122.4mA		180mA	
			Flashing Triple Strike	144.8mA		211.2mA	
D2xC2LD2DC048	48Vdc	48Vdc	Steady High Power	115mA	181mA	115mA	218mA
			Steady Low Power	62.4mA		62.4mA	
			Flashing 1Hz	47.4mA		47.4mA	
			Flashing 1.33Hz	50.3mA		50.3mA	
			Flashing 2Hz	51.1mA		51.1mA	
			Flashing Double Strike	62.2mA		62.2mA	
			Flashing Triple Strike	69.2mA		69.2mA	
D2xC2LD2AC115	115Vac 60Hz	115-120Vac 50/60Hz	Steady High Power	83mA	89mA	102.4mA	91mA
			Steady Low Power	53mA		88.1mA	
			Flashing 1Hz	68mA		99.7mA	
			Flashing 1.33Hz	64.1mA		97.6mA	
			Flashing 2Hz	59.2mA		93.8mA	
			Flashing Double Strike	68.3mA		99.9mA	
			Flashing Triple Strike	72.8mA		102.3mA	
D2xC2LD2AC230	230Vac 50Hz	220-230Vac 50/60Hz	Steady High Power	52mA	52mA	52mA	72mA
			Steady Low Power	42mA		42mA	
			Flashing 1Hz	70mA		75mA	
			Flashing 1.33Hz	61mA		75mA	
			Flashing 2Hz	51mA		62mA	
			Flashing Double Strike	71mA		71mA	
			Flashing Triple Strike	66mA		69mA	

* For Public Mode Fire Alarm use (D2xC2LD2-H)
# nominal rms current at nominal voltage
max. rms current at worst-case voltage in voltage range.

17) Tone Table

Tone Selection – To select the required first stage tone set the tone switches 1 to 6 (see Fig 2) to the tone setting shown in the table below. The table also shows which 2nd, 3rd and 4th stage tones are available for use with the selected first stage tone if more than one tone output stage is required.

Stage 1 Tone No	Tone Description	Tone Visual	Switch Settings 1 2 3 4 5 6	Stage 2 Tone (S2)	Stage 3 Tone (S3)	Stage 4 Tone (S2 + S3)
1	1000Hz PFEER Toxic Gas	1000Hz	0 0 0 0 0 0	3	2	44
2	1200/500Hz @ 1Hz DIN / PFEER P.T.A.P.	1200Hz 500Hz 1s	1 0 0 0 0 0	1	3	44
3	1000Hz @ 0.5Hz(1s on, 1s off) PFEER Gen. Alarm	1000Hz 1s 1s	0 1 0 0 0 0	1	2	44
4	1.4KHz-1.6KHz 1s, 1.6KHz-1.4KHz 0.5s NF C 48-265	1600Hz 1400Hz 1s 0.5s	1 1 0 0 0 0	44	24	1
5	544Hz(100mS)/440Hz (400mS) NF S 32-001	544Hz 440Hz 0.1s 0.4s	0 0 1 0 0 0	52	19	1
6	1500/500Hz - (0.5s on , 0.5s off) x3 + 1s gap AS4428	1500Hz 500Hz 0.5s 0.5s 0.5s 0.5s 0.5s 1.5s	1 0 1 0 0 0	7	44	1
7	500-1500Hz Sweeping 2 sec on 1 sec off AS4428	1500Hz 500Hz 2s 1s	0 1 1 0 0 0	6	44	1
8	500/1200Hz @ 0.26Hz(3.3s on, 0.5s off) Netherlands - NEN 2575	1200Hz 500Hz 3.3s 0.5s	1 1 1 0 0 0	44	24	35
9	1000Hz (1s on, 1s off)x7 + (7s on, 1s off) IMO Code 1a	1000Hz 1s 1s 1s 1s 1s 1s 1s 1s 1s 1s 1s 1s 1s 7s 7s	0 0 0 1 0 0	18	34	1
10	1000Hz (1s on, 1s off)x7 + (7s on, 1s off) IMO Code 1a		1 0 0 1 0 0	21	34	1
11	420Hz(0.5s on, 0.5s off)x3 + 1s gap ISO 8201 Temporal Pattern	420Hz 0.5s 0.5s 0.5s 0.5s 0.5s 1.5s	0 1 0 1 0 0	44	1	8
12	1000Hz(0.5s on, 0.5s off)x3 + 1s gap ISO 8201 Temporal Pattern	1000Hz 0.5s 0.5s 0.5s 0.5s 0.5s 1.5s	1 1 0 1 0 0	44	1	8
13	422/775Hz - (0.85 on, 0.5 off) x3 + 1s gap NFPA - Temporal Coded	775Hz 422Hz 0.85s 0.5s 0.85s 0.5s 0.85s 1.5s	0 0 1 1 0 0	44	1	8
14	1000/2000Hz @ 1Hz Singapore	2000Hz 1000Hz 1s	1 0 1 1 0 0	23	3	35
15	300Hz Continuous	300Hz	0 1 1 1 0 0	44	24	35
16	440Hz Continuous	440Hz	1 1 1 1 0 0	44	24	35
17	470Hz Continuous	470Hz	0 0 0 0 1 0	44	24	35
18	500Hz Continuous IMO code 2 (Low)	500Hz	1 0 0 0 1 0	44	24	35
19	554Hz Continuous	554Hz	0 1 0 0 1 0	64	24	35
20	660Hz Continuous	660Hz	1 1 0 0 1 0	44	24	35
21	800Hz IMO code 2 (High)	800Hz	0 0 1 0 1 0	44	24	35
22	1200Hz Continuous	1200Hz	1 0 1 0 1 0	44	24	35
23	2000Hz Continuous	2000Hz	0 1 1 0 1 0	15	3	35
24	2400Hz Continuous	2400Hz	1 1 1 0 1 0	48	20	35
25	440 @0.83Hz (50 cycles/minute) Intermittent	440Hz 0.6s 0.6s	0 0 0 1 1 0	1	44	8
26	470 @0.9Hz - 1.1s Intermittent	470Hz 0.55s 0.55s	1 0 0 1 1 0	1	44	8
27	470Hz @5Hz - (5 cycles/second) Intermittent	470Hz 0.1s 0.1s	0 1 0 1 1 0	1	44	8
28	544Hz @ 1.14Hz - 0.875s Intermittent	470Hz 0.43s 0.44s	1 1 0 1 1 0	44	24	8
29	655Hz @ 0.875Hz Intermittent	655Hz 0.57s 0.57s	0 0 1 1 1 0	1	44	8
30	660Hz @0.28Hz - 1.8sec on, 1.8sec off Intermittent	660Hz 1.8s 1.8s	1 0 1 1 1 0	44	24	8
31	660Hz @3.34Hz - 150mS on, 150mS off Intermittent	660Hz 0.15s 0.15s	0 1 1 1 1 0	30	24	8

32	745Hz @ 1Hz Intermittent	745Hz 0.5s 0.5s	1 1 1 1 1 0	44	24	8
33	800Hz - 0.25sec on, 1 sec off Intermittent	800Hz 0.25s 1s	0 0 0 0 0 1	53	24	8
34	800Hz @ 2Hz IMO code 3.a (High) Intermittent	800Hz 0.25s 0.25s	1 0 0 0 0 1	56	24	8
35	1000Hz @ 1Hz Intermittent	1000Hz 0.5s 0.5s	0 1 0 0 0 1	44	24	8
36	2400Hz @ 1Hz Intermittent	2400Hz 0.5s 0.5s	1 1 0 0 0 1	21	24	8
37	2900Hz @ 5Hz Intermittent	2900Hz 0.1s 0.1s	0 0 1 0 0 1	53	24	8
38	363/518Hz @ 1Hz Alternating	518Hz 363Hz 0.5s 0.5s	1 0 1 0 0 1	1	8	19
39	450/500Hz @ 2Hz Alternating	500Hz 450Hz 0.25s 0.25s	0 1 1 0 0 1	1	8	19
40	554/440Hz @ 1Hz Alternating	554Hz 440Hz 0.5s 0.5s	1 1 1 0 0 1	44	24	19
41	554/440Hz @ 0.625Hz Alternating	554Hz 440Hz 0.8s 0.8s	0 0 0 1 0 1	1	8	19
42	561/760Hz @0.83Hz (50 cycles/minute) Alternating	760Hz 561Hz 0.6s 0.6s	1 0 0 1 0 1	1	8	19
43	780/600Hz @ 0.96Hz Alternating	780Hz 600Hz 0.52s 0.52s	0 1 0 1 0 1	1	8	19
44	800/1000Hz @ 2Hz Alternating	1000Hz 800Hz 0.25s 0.25s	1 1 0 1 0 1	5	24	19
45	970/800Hz @ 2Hz Alternating	970Hz 800Hz 0.25s 0.25s	0 0 1 1 0 1	1	8	19
46	800/1000Hz @ 0.875Hz Alternating	1000Hz 800Hz 0.57s 0.57s	1 0 1 1 0 1	53	24	19
47	2400/2900Hz @ 2Hz Alternating	2900Hz 2400Hz 0.25s 0.25s	0 1 1 1 0 1	57	24	19
48	500/1200Hz @ 0.3Hz Sweeping	1200Hz 500Hz 3.34s	1 1 1 1 0 1	44	24	12
49	560/1055Hz @ 0.18Hz Sweeping	1055Hz 560Hz 5.47s	0 0 0 0 1 1	44	24	12
50	560/1055Hz @ 3.3Hz Sweeping	1055Hz 560Hz 0.3s	1 0 0 0 1 1	44	24	12
51	600/1250Hz @ 0.125Hz Sweeping	1250Hz 600Hz 8s	0 1 0 0 1 1	44	24	12
52	660/1200Hz @ 1Hz Sweeping	1200Hz 660Hz 1s	1 1 0 0 1 1	64	24	12
53	800/1000Hz @ 1Hz Sweeping	1000Hz 800Hz 1s	0 0 1 0 1 1	56	24	12
54	800/1000Hz @ 7Hz Sweeping	1000Hz 800Hz 0.14s	1 0 1 0 1 1	57	24	12
55	800/1000Hz @ 50Hz Sweeping	1000Hz 800Hz 0.02s	0 1 1 0 1 1	54	24	12
56	2400/2900Hz @ 7Hz Sweeping	2900Hz 2400Hz 0.14s	1 1 1 0 1 1	57	24	12
57	2400/2900Hz @ 1Hz Sweeping	2900Hz 2400Hz 1s	0 0 0 1 1 1	47	24	12
58	2400/2900Hz @ 50Hz Sweeping	2900Hz 2400Hz 0.02s	1 0 0 1 1 1	54	24	12
59	2500/3000Hz @ 2Hz Sweeping	3000Hz 2500Hz 0.5s	0 1 0 1 1 1	44	24	12
60	2500/3000Hz @ 7.7Hz Sweeping	3000Hz 2500Hz 0.13s	1 1 0 1 1 1	44	24	12
61	800Hz Motor Siren	800Hz 1.6s	0 0 1 1 1 1	44	24	12
62	1200Hz Motor Siren	1200Hz 2s	1 0 1 1 1 1	44	24	12
63	2400Hz Motor Siren	2400Hz 1.7s	0 1 1 1 1 1	44	24	12
64	Simulated Bell	1450Hz 0.25s 0.69ms	1 1 1 1 1 1	44	21	12

FIRE INSTRUCTION MANUAL

D2xC2LD2 Alarm Horn and LED

For use in Hazardous Locations

1) Warnings

- DO NOT PAINT

Avertissement:

- NE PAS PEINTURER

2) Rating & Marking Information

2.1 Public Mode Fire Alarm Ratings

The D2xC2LD2DC024 is certified for use a as public mode audible and visual alarm device in accordance with UL464 & UL1971 / UL1638.

For use in public-mode fire alarm systems the equipment must be installed without the wire guard or plastic lens cover on the beacon.

The beacon must be set to one of the certified flash patterns of 1Hz, 1.33Hz or 2Hz (for DIP switch settings see section 10).

For light output ratings of the beacon see section 12.

The sounder section produces a sound pressure level above 75dB(A) at 10 feet:

For Fire Alarm applications, the Sounder Volume must be at the highest setting, (see volume control section).

For fire alarm use, the temporal pattern tone No. 12 as per the tone table provided in these instructions must be selected.
This tone produces a minimum sound pressure level of:

CAN/ULC-S525: 100.4dB(A)* at 10 feet.
(*anechoic room)
UL464: 92.2dB(A)† at 10 feet.
(†reverberation room)

Testing of synchronization requirements of UL1971 & UL1638 / CAN/ULC-S526 were conducted by UL using a total of 6 units connected to the same wire run. Auto-synchronization does not require the use of any external sync modules or protocols. Providing the correct cable has been selected (see section 6) an unlimited number of units will remain synchronized when powered from the same source.

2.2 Private Mode Fire Alarm Ratings

The D2xC2LD2DC024 is approved for use as Audible and Visual Appliance for use in Fire Alarm Systems – Private Mode.

For private mode fire alarm use the beacons must only be fitted with clear or red plastic lens covers and must be set to one of the certified flash patterns of 1Hz, 1.33Hz or 2Hz.

For light output ratings see section .

3) Light output for Fire alarm use

In order to meet the requirements for UL 1971, (D2xC2LD2DC024 when used with 1Hz, 1.33Hz or 2Hz Flash rates and without plastic lens cover and wire guard only), the installation must be carried out to the correct NFPA standards and guidelines.

3.1 Horizontal Light Output Dispersion for wall mounting – public mode

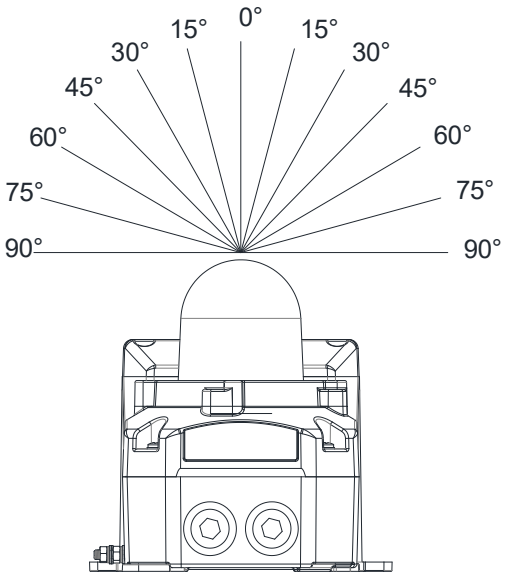

Fig. 1 – Horizontal dispersion angles for wall mounting

Table 1 - Horizontal Light Output Dispersion for Wall Mounting				
Viewing Angle	**% Of Rating**	**Intensity (cd) at 1Hz flash rate**	**Intensity (cd) at 1.33Hz flash rate**	**Intensity (cd) at 2Hz flash rate**
0^0	100	38.38	35.87	25.97
$5\text{-}25^0$	90	34.54	32.28	23.37
$30\text{-}45^0$	75	28.79	26.90	19.48
50^0	55	21.11	14.28	14.28
55^0	45	17.27	11.69	11.69
60^0	40	15.35	10.39	10.39
65^0	35	13.43	9.09	9.09
70^0	35	13.43	9.09	9.09
75^0	30	11.51	7.79	7.79
80^0	30	11.51	7.79	7.79
85^0	25	9.60	6.49	6.49
90^0	25	9.60	6.49	6.49
Compound 45^0 to Right	24	9.21	8.61	6.23
Compound 45^0 to Left	24	9.21	8.61	6.23

3.2 Vertical Light Output Dispersion for wall mounting – public mode

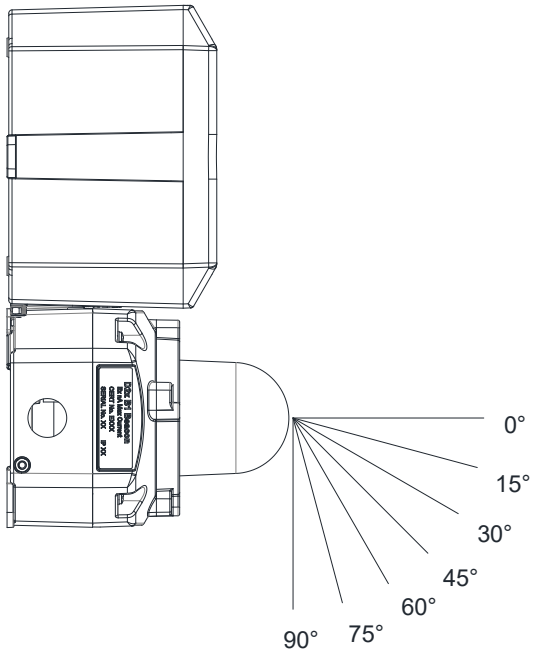

Fig. 2 – Vertical dispersion angles for wall mounting

Table 2 - Vertical Light Output Dispersion for Wall Mounting				
Viewing Angle	**% Of Rating**	**Intensity (cd) at 1Hz flash rate**	**Intensity (cd) at 1.33Hz flash rate**	**Intensity (cd) at 2Hz flash rate**
0°	100	38.38	35.87	25.97
5-30°	90	34.54	32.28	23.37
35°	65	24.95	23.32	16.88
40°	46	17.65	16.50	11.95
45°	34	13.05	12.20	8.83
50°	27	10.36	9.68	7.01
55°	22	8.44	7.89	5.71
60°	18	6.91	6.46	4.67
65°	16	6.14	5.74	4.16
70°	15	5.76	5.38	3.90
75°	13	4.99	4.66	3.38
80-90°	12	4.61	4.30	3.12

3.3 Vertical Light Output Dispersion for ceiling mounting – public mode

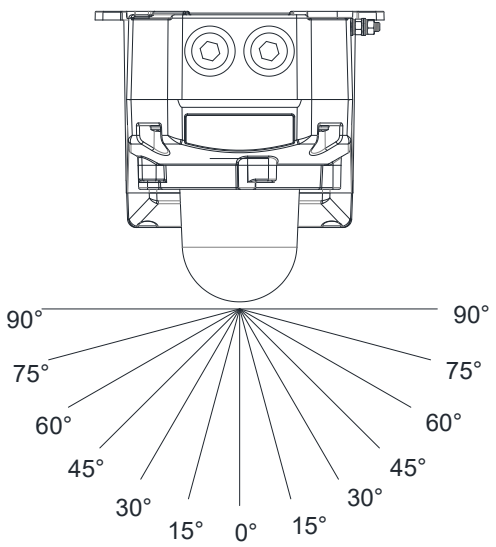

Fig. 3 – Vertical dispersion angles for ceiling mounting

Table 3 – Vertical Light Output Dispersion for Ceiling Mounting				
Viewing Angle	**% Of Rating**	**Intensity (cd) at 1Hz flash rate**	**Intensity (cd) at 1.33Hz flash rate**	**Intensity (cd) at 2Hz flash rate**
0^0	100	38.38	35.87	25.97
$5\text{-}25^0$	90	34.54	32.28	23.37
$30\text{-}45^0$	75	28.79	26.90	19.48
50^0	55	21.11	19.73	14.28
55^0	45	17.27	16.14	11.69
60^0	40	15.35	14.35	10.39
65^0	35	13.43	12.55	9.09
70^0	35	13.43	12.55	9.09
75^0	30	11.51	10.76	7.79
80^0	30	11.51	10.76	7.79
85^0	25	9.60	8.97	6.49
90^0	25	9.60	8.97	6.49

All light output ratings min. values as per UL 1971 / UL1638 / CAN/ULC-S526 at worst-case (min.) input voltage.

3.4 On-axis light output rating – private mode

Table 5 – Vertical Light Output Dispersion for Ceiling Mounting		
Model	**Lens Cover Colour**	**Intensity (cd) at 1Hz flash rate**
D2xC2LD2DC024	clear	73.4
	red	67.27

4) Electrical Ratings

4.1 Surge current for Fire Alarm system use

Table 4 – Surge Currents					
Model	**Nom. Voltage**	**Voltage Range**	**Flash Rate Setting**	**Init, Peak Surge Current (A)**	**Init. RMS Surge Current (mA)**
D2xC2LD2DC024	24Vdc	Regulated 24 (16-33Vdc)*	1Hz (60fpm)	2.73	240
			1.33Hz (80 fpm)	2.75	214
			2Hz (120fpm)	2.33	204

5) Sound Directional Characteristics for Canadian Fire CAN/ULC-S525

Horizontal Axis

Angle	**OSPL**	**Angle**	**OSPL**
Reference (90°)	101.2 dB(A)	Reference (90°)	101.2 dB(A)
115°	-3 dB(A)	68°	-3 dB(A)
129°	-6 dB(A)	55°	-6 dB(A)
180°	92.4 dB(A)	0°	92.4

Vertical Axis

Angle	**OSPL**	**Angle**	**OSPL**
Reference (90°)	101.5 dB(A)	Reference (90°)	101.5 dB(A)
123°	-3 dB(A)	65°	-3 dB(A)
137°	-6 dB(A)	50°	-6 dB(A)
180°	91 dB(A)	0°	88.5 dB(A)

ISSUE	MOD No.	REASON - INITIAL - DATE
1		INTRODUCTION RSR 02-01-2020
2		UPDATED FORMAT DH 17-05-2022

R1 — OPTIONAL LINE MONITORING RESISTOR, CUSTOMER SUPPLIED, REQUIRED MINIMUM VALUES:
24VDC : 1KΩ MIN, 2W MIN OR 3K9Ω MIN, 0.5W MIN
48VDC : 3.9KΩ MIN, 2W MIN OR 15KΩ MIN, 0.5W MIN

-------- WIRING LINKING BEACON & SOUNDER FACTORY FITTED

TO OPERATE SOUNDER AND BEACON INDEPENDENTLY, REMOVE FACTORY FITTED WIRES LINKING THE UNITS

DC D2XC2LD2 UNITS

Line Monitoring

Stage 1: Apply power to Sounder +ve & -ve
Stage 2: Apply power to Sounder +ve & -ve. Connect Stage 2 to -ve
Stage 3: Apply power to Sounder +ve & -ve. Connect Stage 3 to -ve
Stage 4: Apply power to Sounder +ve & -ve. Connect Stage 2 and Stage 3 to -ve

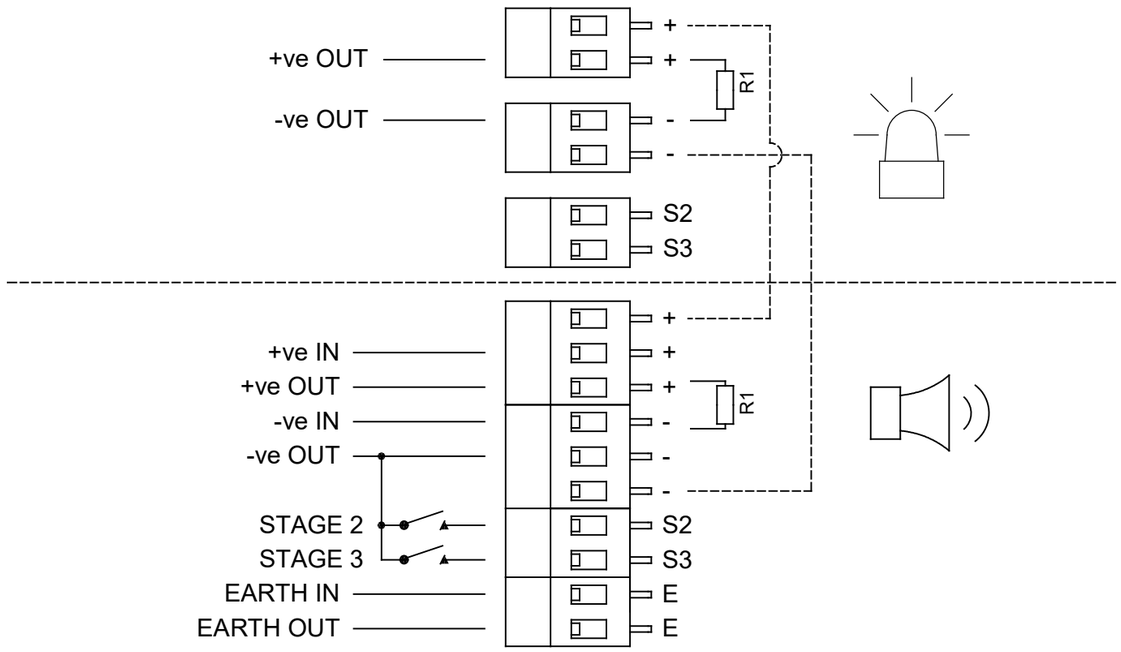

AC D2XC2LD2 UNITS

Power: Live & Neutral

Stage 1: Apply power to Sounder L & N
Stage 2: Apply power to Sounder L & N. Connect Stage 2 to Common
Stage 3: Apply power to Sounder L & N. Connect Stage 3 to Common
Stage 4: Apply power to Sounder L & N. Connect Stage 2 and Stage 3 to Common

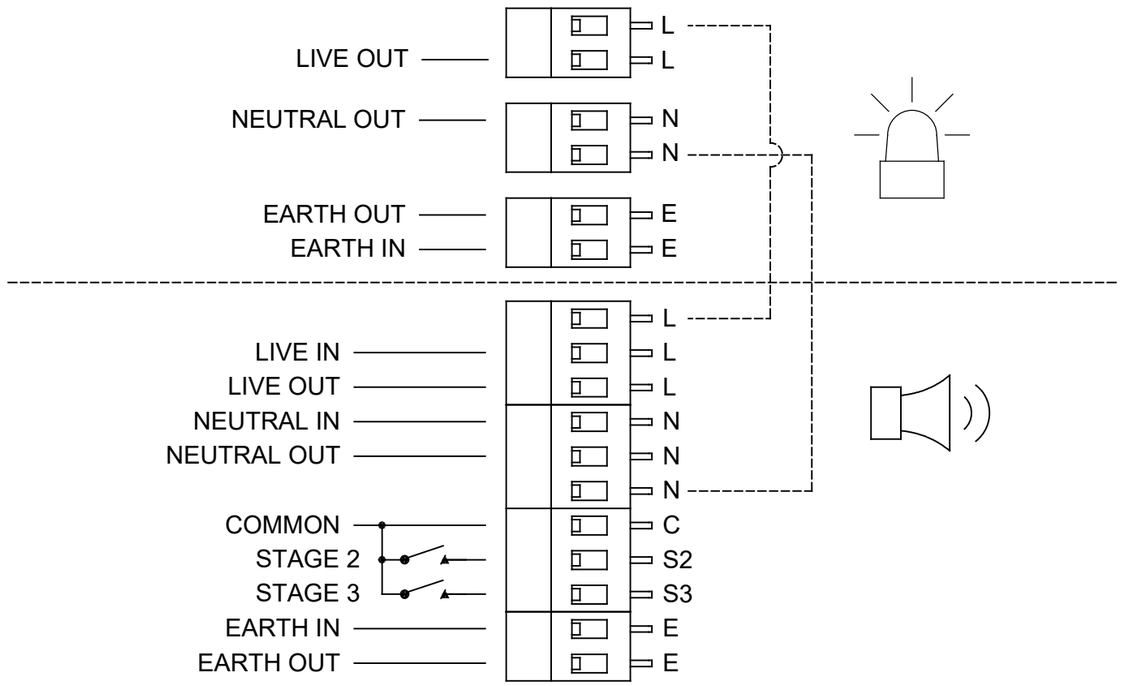

DRAWING TO BS8888:2000 GEOMETRIC TOLERANCES TO ISO1101:1983 LINEAR DIMENSIONAL TOLS +/−0.35mm ANGULAR DIMENSIONAL TOLS +/−2 deg	DRAWN R.S. RAIT	DATE 27-06-2019	SURFACE FINISH / WEIGHT (Kg)
STANDARDS D2x	CHECKED B. ISARD	DATE 27-06-2019	MATERIAL
	APPROVED R.N.POTTS	DATE 27-06-2019	ALTERNATIVE MATERIAL

e2S warning signals
EUROPEAN SAFETY SYSTEMS LTD
IMPRESS HOUSE
MANSELL ROAD
ACTON
LONDON W3 7QH
WWW.E2S.COM

ALL DIMENSIONS IN MM
IF IN DOUBT, ASK - DO NOT SCALE

A3

TITLE D2xC2LD2 PUBLIC MODE FIRE/GENERAL SIGNALING COMBINED BEACON AND SOUNDER WIRING DIAGRAM

SCALE	SHEET	DRAWING NUMBER
NTS	1 OF 1	D211-06-611

EU Declaration of Conformity

Manufacturer:	European Safety Systems Ltd. Impress House, Mansell Road, Acton London, W3 7QH United Kingdom
Authorised Representative:	E2S Warnsignaltechnik UG Charlottenstrasse 45-51 72764 Reutlingen Germany
Equipment Type:	D2xS1, D2xC1X05, D2xC1X10 D2xB1X05, D2xB1X10, D2xB1LD2, D2xB1XH1, D2xB1XH2, D2xB1LD3 D2xC2X05, D2xC2X10, D2xC2LD2, D2xC2XH1, D2xC2XH2, D2xC2LD3 D2xJ1

Directive 2014/34/EU: Equipment and Protective Systems for use in Potentially Explosive Atmospheres (ATEX)

Notified Body for EU type Examination (Module B):	UL International Demko A/S Notified Body No.: 0539 Borupvang 5A, 2750 Ballerup, Denmark
EU-type Examination Certificate (Module B):	DEMKO 14 ATEX 4786493904X
Notified Body for Quality Assurance Notification / Conformity to EU-type based on quality assurance of the production process (Module D):	Sira Certification Service Notified Body No.: 2813 CSA Group Netherlands B.V, Utrechtseweg 310, 6812 AR, Arnhem, Netherlands
Quality Assurance Notification (Module D):	SIRA 05 ATEX M342
Provisions fulfilled by the equipment:	II 3G Ex ec IIC T6/T4/T3/T2/T1 Gc II 3D Ex tc IIIC Ex tc IIIC T55/75/80/85/90/95/105/110°C Dc IP66 Ingress / Dust Protection to EN60079-0 / EN60079-31
Standards applied:	EN IEC 60079-0:2018 EN IEC 60079-7:2015 +A1:2018 EN 60079-31:2014

Directive 2014/30/EU: Electromagnetic Compatibility Directive (EMC)

Standards applied:	EN 61000-6-1:2007 EN 61000-6-2:2005 EN 61000-6-3:2007 / A1:2011 / AC: 2012 EN 61000-6-4:2007 / A1: 2011

Directive 2011/65/EU: Restriction of the use of certain hazardous substances in electrical and electronic equipment (RoHS)

The product and all the components contained within it are in accordance with the restriction of the use of hazardous substances in electrical and electronic equipment, including amendment by Directive 2015/863/EU.

Regulation (EC) 1907/2006: Registration, Evaluation, Authorisation and Restriction of Chemicals (REACH)

The product and all the components contained within it are free from substances of very high concern.

Other Standards and Regulations

EN 60529:1992+A2:2013 - Degrees of protection provided by enclosures (IP code) – enclosure rated IP66

EU Declaration of Conformity

On behalf of European Safety Systems Ltd., I declare that, on the date the equipment accompanied by this declaration is placed on the market, the equipment conforms with all technical and regulatory requirements of the above listed directives, regulations and standards.

This Declaration is issued under the sole responsibility of the manufacturer.

Martin Streetz
Quality Assurance Manager

Document No.: DC-061_Issue_J
Date and Place of Issue: London, 22/08/2022

UKCA Declaration of Conformity

Manufacturer:	European Safety Systems Ltd. Impress House, Mansell Road, Acton London, W3 7QH United Kingdom
Equipment Type:	D2xS1, D2xC1X05, D2xC1X10 D2xB1X05, D2xB1X10, D2xB1LD2, D2xB1XH1, D2xB1XH2, D2xB1LD3 D2xC2X05, D2xC2X10, D2xC2LD2, D2xC2XH1, D2xC2XH2, D2xC2LD3 D2xJ1

Directive UKSI 2016:1107 (as amended by UKSI 2019:696) – Schedule 3A, Part 1 : Product or Protective System Intended for use in Potentially Explosive Atmospheres (UKCA)

Notified Body for UK type Examination (Module B):	UL International (UK) Ltd Notified Body No.: 0843 Unit 1-3 Horizon Kingsland Business Park, Wade Road, Basingstoke, Hampshire RG24 8AH UK
UK-type Examination Certificate (Module B):	UL21UKEX2131X
Notified Body for Quality Assurance Notification / Conformity to EU-type based on quality assurance of the production process (Module D):	Sira Certification Service Notified Body No.: 0518 Rake Lane, Eccleston, Chester CH4 9JN, UK
Quality Assurance Notification (Module D):	CSAE 22UKQAN0046
Provisions fulfilled by the equipment:	II 3G Ex ec IIC T6/T4/T3/T2/T1 Gc II 3D Ex tc IIIC Ex tc IIIC T55/75/80/85/90/95/105/110°C Dc IP66 Ingress / Dust Protection to EN60079-0 / EN60079-31
Standards applied:	EN IEC 60079-0:2018 EN IEC 60079-7:2015 +A1:2018 EN 60079-31:2014

Directive 2014/30/EU: Electromagnetic Compatibility Directive (EMC)

Standards applied:	EN 61000-6-1:2007 EN 61000-6-2:2005 EN 61000-6-3:2007 / A1:2011 / AC: 2012 EN 61000-6-4:2007 / A1: 2011

Directive 2011/65/EU: Restriction of the use of certain hazardous substances in electrical and electronic equipment (RoHS)

The product and all the components contained within it are in accordance with the restriction of the use of hazardous substances in electrical and electronic equipment, including amendment by Directive 2015/863/EU.

Regulation (EC) 1907/2006: Registration, Evaluation, Authorisation and Restriction of Chemicals (REACH)

The product and all the components contained within it are free from substances of very high concern.

Other Standards and Regulations

EN 60529:1992+A2:2013 - Degrees of protection provided by enclosures (IP code) – enclosure rated IP66

UKCA Declaration of Conformity

On behalf of European Safety Systems Ltd., I declare that, on the date the equipment accompanied by this declaration is placed on the market, the equipment conforms with all technical and regulatory requirements of the above listed directives, regulations and standards.

This Declaration is issued under the sole responsibility of the manufacturer.

Martin Streetz
Quality Assurance Manager

Document No.:	DC-102_Issue_A
Date and Place of Issue:	London, 22/08/2022