ISSUE	MOD No.	REASON - INITIAL - DATE
A		Introduction M.VYAS - 03/01/18
B		Various changes to notes DAH - 26/07/2018

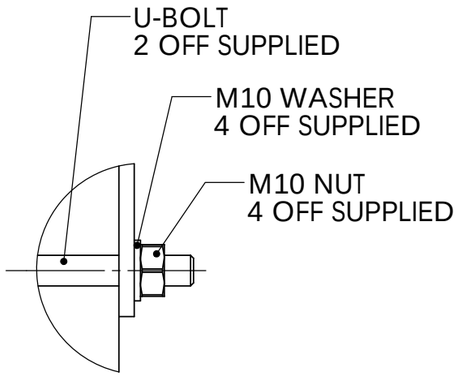

DETAIL A
SCALE 1 : 2

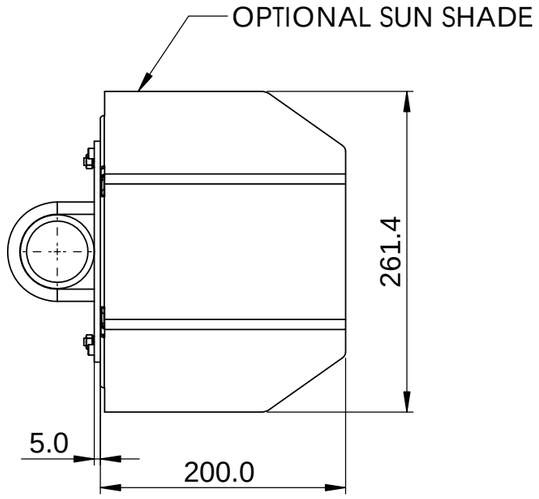

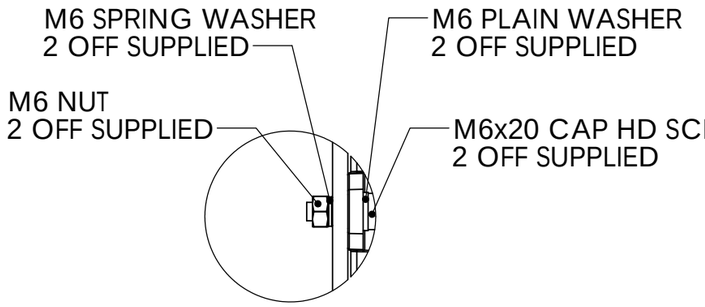

DETAIL B
SCALE 1 : 2

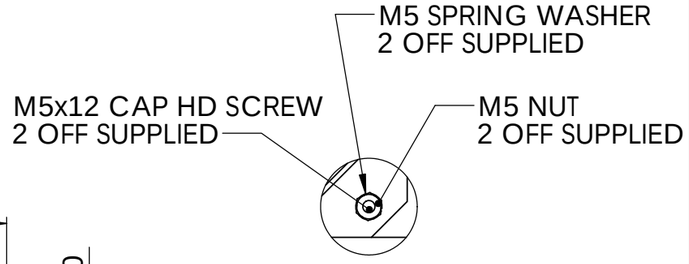

DETAIL C
SCALE 1 : 2

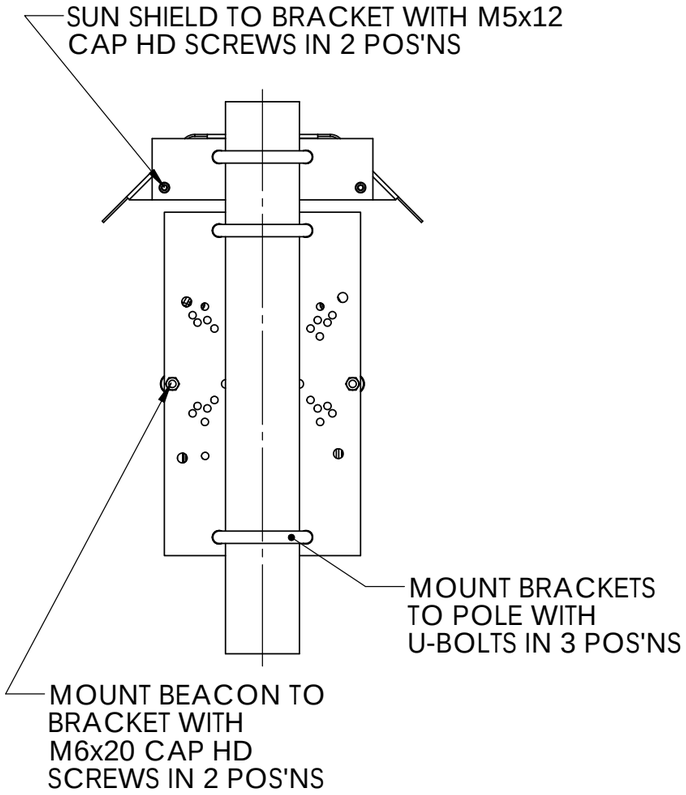

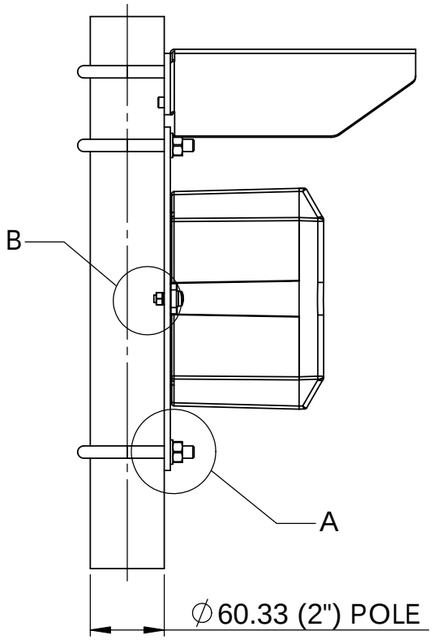

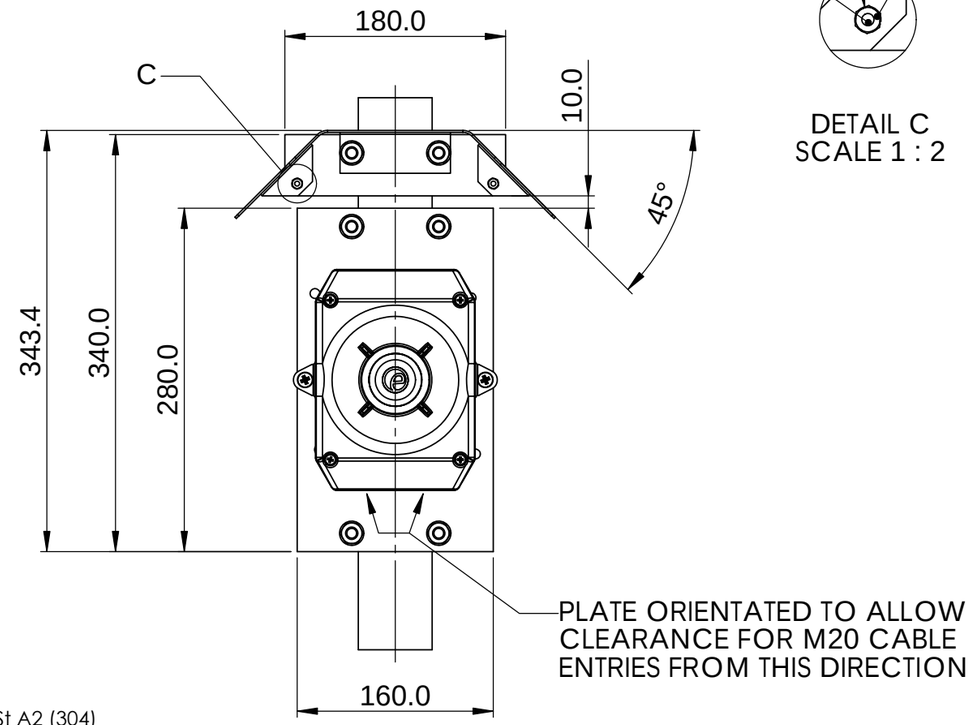

Part Codes:	Description:
SP65-0001-A2	Pole Mount Bracket Kit 2" St/St A2 (304)
SP65-0001-A4	Pole Mount Bracket Kit 2" St/St A4 (316)
SP65-0002-A2	Sunshade - St/St A2 (304)
SP65-0002-A4	Sunshade - St/St A4 (316)

DRAWING TO BS8888:2000
GEOMETRIC TOLERANCES TO ISO1101:1983
LINEAR DIMENSIONAL TOLS
ANGULAR DIMENSIONAL TOLS

STANDARDS
PRODUCT
REF

DRAWN	M.VYAS	DATE 03/01/18
CHECKED	R.N.POTTS	DATE 03/01/18
APPROVED	R.N.POTTS	DATE 03/01/18

SURFACE FINISH
WEIGHT (Kg)
MATERIAL
ALTERNATIVE MATERIAL

THIS DRAWING AND ANY INFORMATION OR DESCRIPTIVE MATTER THEREIN IS COMMUNICATED IN CONFIDENCE AND IS THE COPYRIGHT PROPERTY OF EUROPEAN SAFETY SYSTEMS LTD. NEITHER THE WHOLE OR ANY EXTRACT MAY BE DISCLOSED, LOANED, COPIED OR USED FOR MANUFACTURING OR TENDERING PURPOSES WITHOUT THEIR WRITTEN CONSENT.

© EUROPEAN SAFETY SYSTEMS LTD.
AS PER LATEST DATE OF ISSUE SHOWN ABOVE

e2S warning signals
EUROPEAN SAFETY SYSTEMS LTD
IMPRESS HOUSE
MANSELL ROAD
ACTON
LONDON W3 7QH
WWW.E2S.COM

ALL DIMENSIONS IN MM
IF IN DOUBT, ASK -
DO NOT SCALE

A3

TITLE DN 50mm (NPS 2") POLE & SUNSCREEN
D2xS1 HORNS

SCALE	SHEET	DRAWING NUMBER
1 : 1	1 OF 1	D217-05-041