ISSUE	MOD No.	REASON - INITIAL - DATE
1		Introduction - JS - 19/02/2021

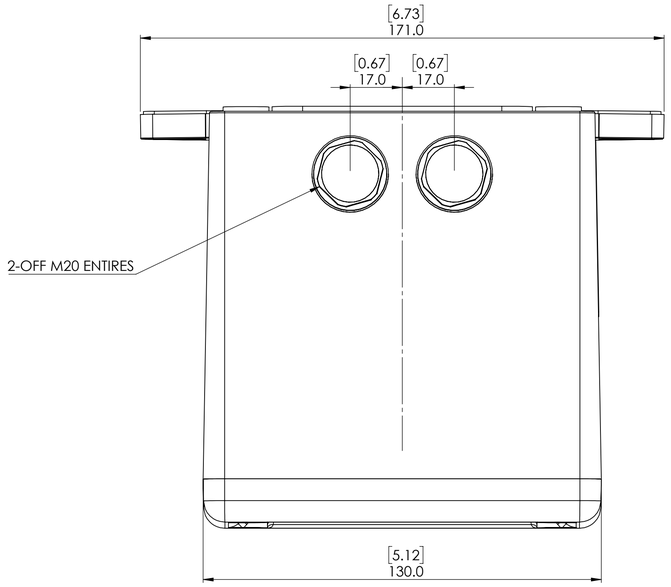

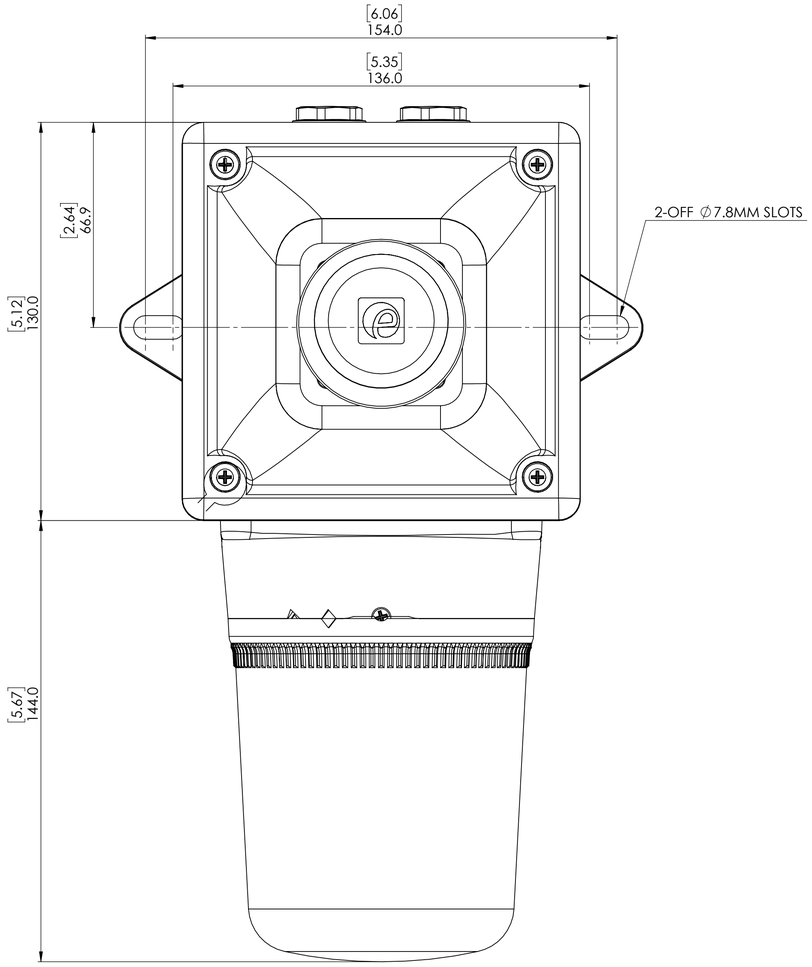

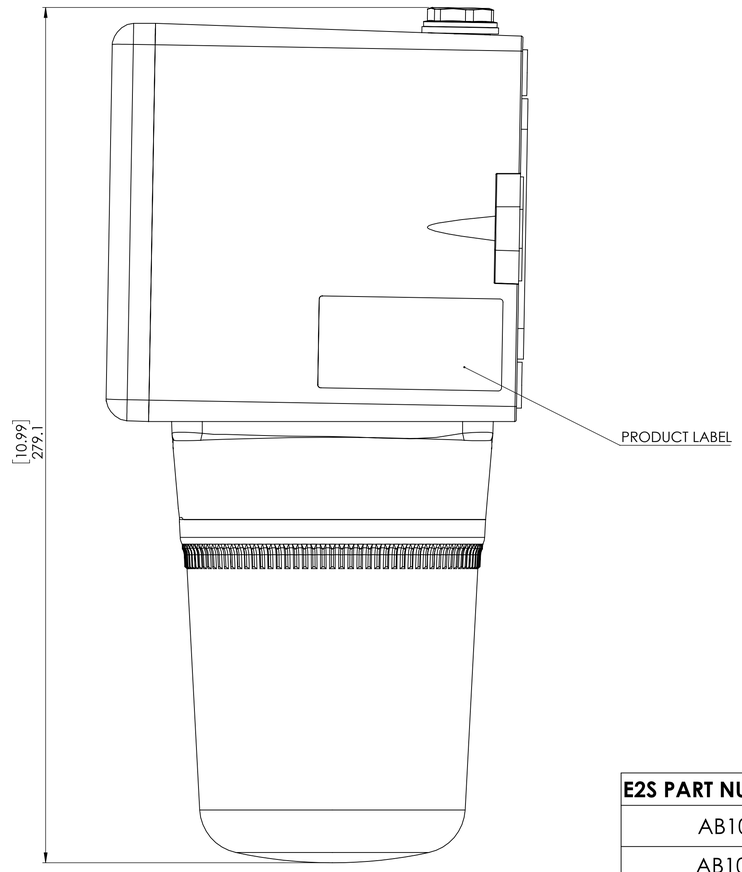

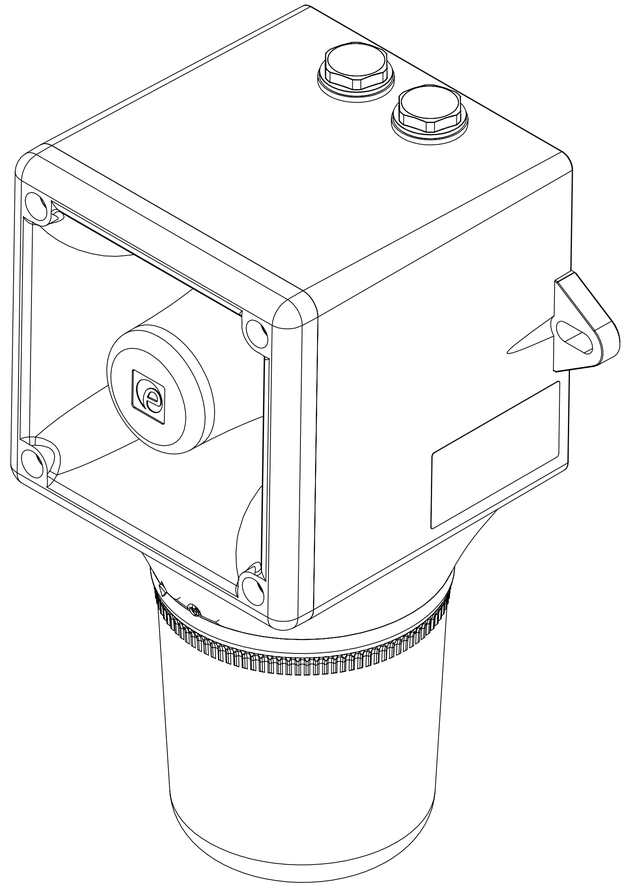

E2S PART NUMBER	DESCRIPTION	DATA REFERENCE
AB105STR	AB105STR ALARM SOUNDER & XENON STROBE	2.31.160
AB105RTH	AB105RTH ALARM SOUNDER & ROTATING BEACON	2.31.150
AB105LDA	AB105LDA ALARM SOUNDER & LED BEACON	2.31.170

RELATED DRAWING

No modification permitted without reference to the "Authorised Person"

DRAWING TO BS8888:2000
GEOMETRIC TOLERANCES TO ISO1101:1983
LINEAR DIMENSIONAL TOLS
ANGULAR DIMENSIONAL TOLS

STANDARDS
PRODUCT
REF

DRAWN	J.SPILLER	DATE 19/02/2021
CHECKED	R.N.POTTS	DATE 19/02/2021
APPROVED	R.N.POTTS	DATE 19/02/2021

SURFACE FINISH FINISH
WEIGHT (Kg)
MATERIAL
ALTERNATIVE MATERIAL

THIS DRAWING AND ANY INFORMATION OR DESCRIPTIVE MATTER THEREIN IS COMMUNICATED IN CONFIDENCE AND IS THE COPYRIGHT PROPERTY OF EUROPEAN SAFETY SYSTEMS LTD. NEITHER THE WHOLE OR ANY EXTRACT MAY BE DISCLOSED, LOANED, COPIED OR USED FOR MANUFACTURING OR TENDERING PURPOSES WITHOUT THEIR WRITTEN CONSENT.

© EUROPEAN SAFETY SYSTEMS LTD. AS PER LATEST DATE OF ISSUE SHOWN ABOVE

e2S warning signals
EUROPEAN SAFETY SYSTEMS LTD
IMPRESS HOUSE
MANSELL ROAD
ACTON
LONDON W3 7QH
WWW.E2S.COM

ALL DIMENSIONS IN MM
IF IN DOUBT, ASK - DO NOT SCALE

A1

TITLE AB105 RANGE OUTLINE DRAWING

SCALE	SHEET	DRAWING NUMBER
1:2	1 OF 1	D118-05-001