E2S PART NO.	DESCRIPTION	DATA REFERENCE
BExCP3A-BG BExCP3B-BG BExCP3C-BG BExCP3D-BG	BExCP3-BG BREAK GLASS MANUAL CALL POINT	1.24.070
IS-CP4A-BG IS-CP4B-BG	IS-CP4-BG BREAK GLASS MANUAL CALL POINT	1.14.010

ISSUE	MOD No.	REASON - INITIAL - DATE
1		INTRODUCTION DAH - 31-01-20
2		SHEET 2 LIFT FLAP OPTION ADDED DAH - 23-11-20
3		LABEL NOTES ADDED MM 31-07-2023
4		CABLE ENTRIES AT THE BOTTOM MM 20-09-2023

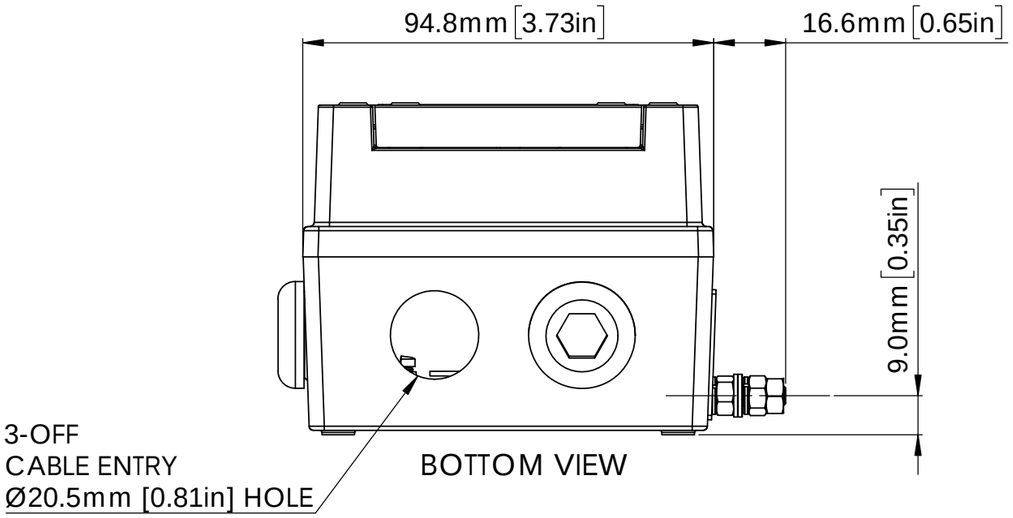

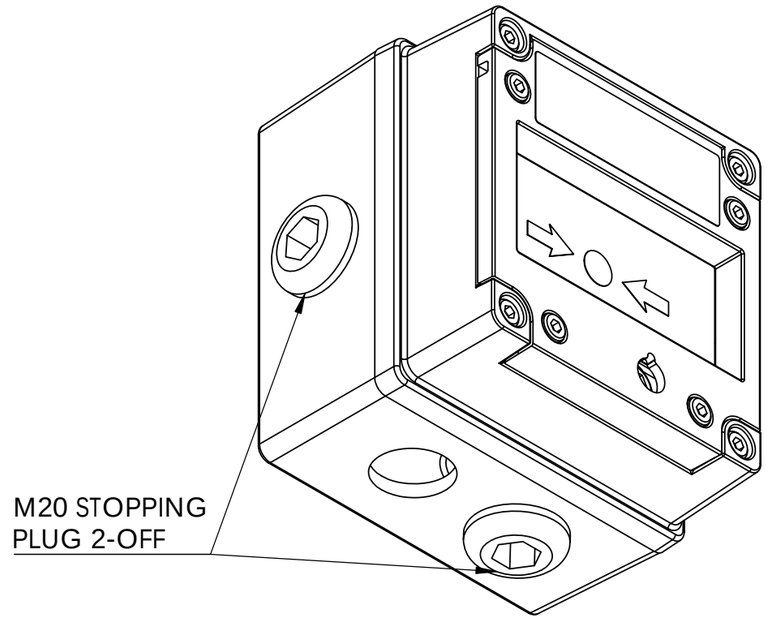

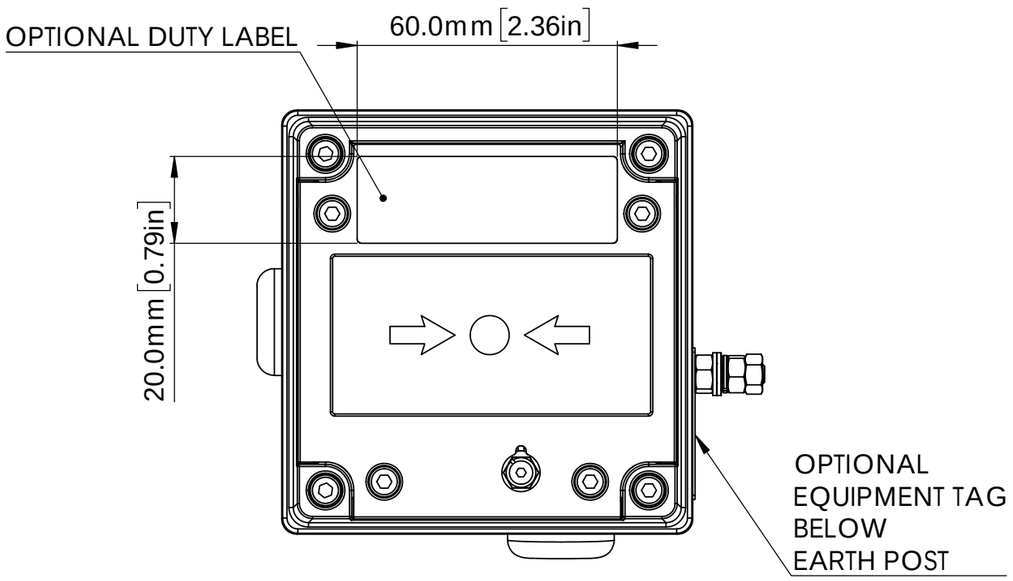

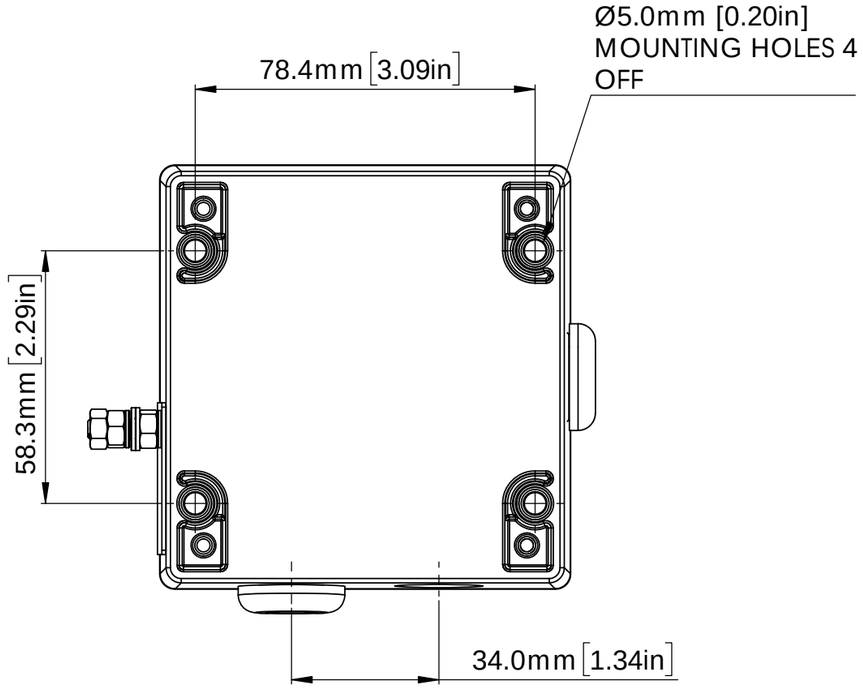

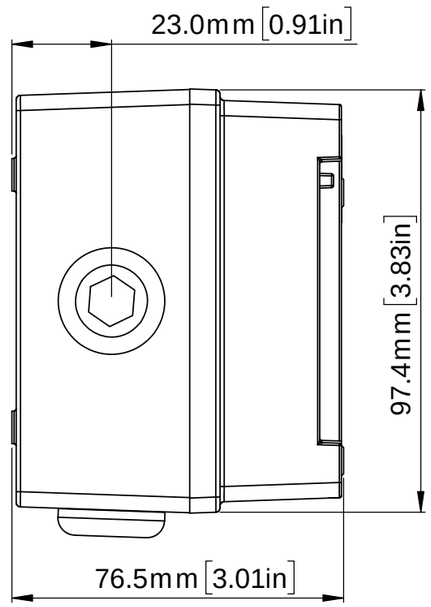

NOTE:

FOR OPTIONAL DUTY LABEL SEE DRAWING D254-00-021
FOR OPTIONAL TAG PLATE SEE DRAWING D254-00-111

DRAWING TO BS8888:2000
GEOMETRIC TOLERANCES TO ISO1101:1983
LINEAR DIMENSIONAL TOLS
ANGULAR DIMENSIONAL TOLS

STANDARDS
BExCP3
IS-CP4

DRAWN D.HOWGILL	DATE 31-01-20	
CHECKED R.N.POTTS	DATE 31-01-20	
APPROVED R.N.POTTS	DATE 31-01-20	

SURFACE FINISH: POWDER COAT
WEIGHT (Kg)
MATERIAL
ALTERNATIVE MATERIAL

THIS DRAWING AND ANY INFORMATION OR DESCRIPTIVE MATTER THEREIN IS COMMUNICATED IN CONFIDENCE AND IS THE COPYRIGHT PROPERTY OF EUROPEAN SAFETY SYSTEMS LTD. NEITHER THE WHOLE OR ANY EXTRACT MAY BE DISCLOSED, LOANED, COPIED OR USED FOR MANUFACTURING OR TENDERING PURPOSES WITHOUT THEIR WRITTEN CONSENT.

© EUROPEAN SAFETY SYSTEMS LTD.
AS PER LATEST DATE OF ISSUE SHOWN ABOVE

E2S warning signals
EUROPEAN SAFETY SYSTEMS LTD
IMPRESS HOUSE
MANSELL ROAD
ACTON
LONDON W3 7QH
WWW.E2S.COM

ALL DIMENSIONS IN MM
IF IN DOUBT, ASK - DO NOT SCALE

A2

TITLE BExCP3-BG / IS-CP4-BG BREAK GLASS MANUAL CALL POINT OUTLINE

SCALE 1:1 | SHEET 1 OF 2 | DRAWING NUMBER D150-05-001

E2S PART NO.	DESCRIPTION	DATA REFERENCE
BExCP3A-BG BExCP3B-BG BExCP3C-BG BExCP3D-BG	BExCP3-BG BREAK GLASS MANUAL CALL POINT	1.24.070
IS-CP4A-BG IS-CP4B-BG	IS-CP4-BG BREAK GLASS MANUAL CALL POINT	1.14.010

ISSUE	MOD No.	REASON - INITIAL - DATE
1		INTRODUCTION DAH - 31-01-20
2		SHEET 2 LIFT FLAP OPTION ADDED DAH - 23-11-20
3		LABEL NOTES ADDED MM 31-07-2023
4		CABLE ENTRIES AT THE BOTTOM MM 20-09-2023

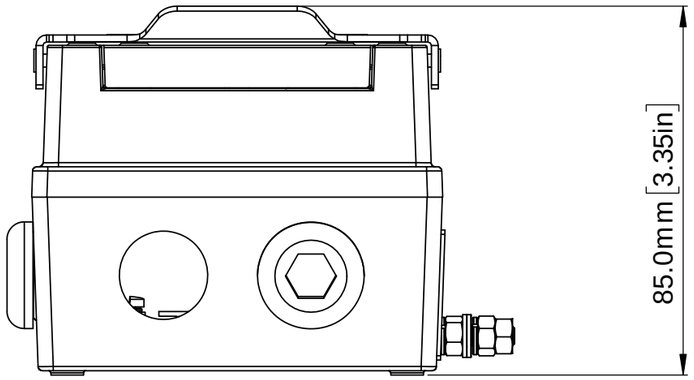

BOTTOM VIEW

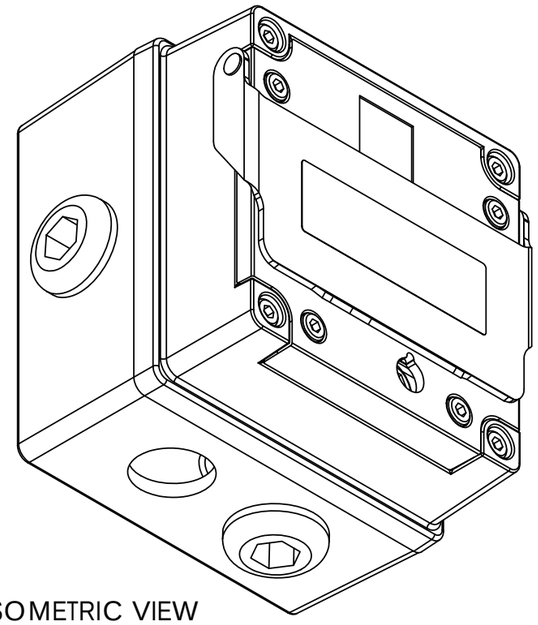

ISOMETRIC VIEW

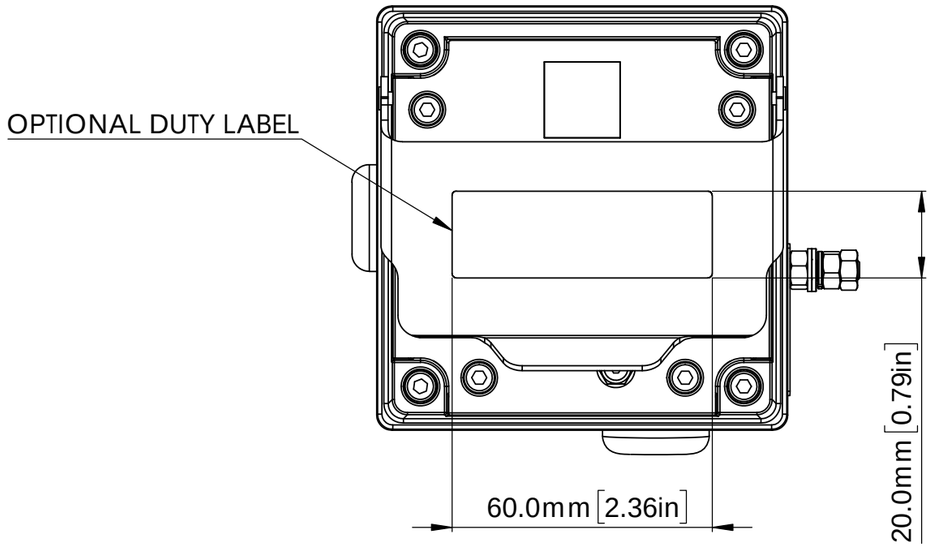

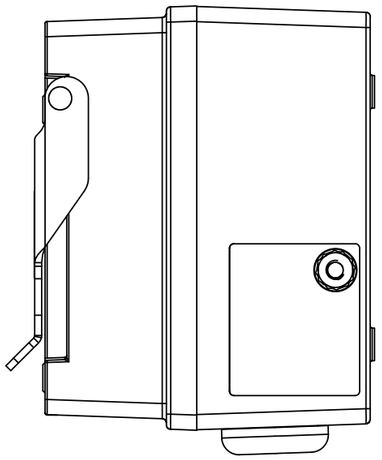

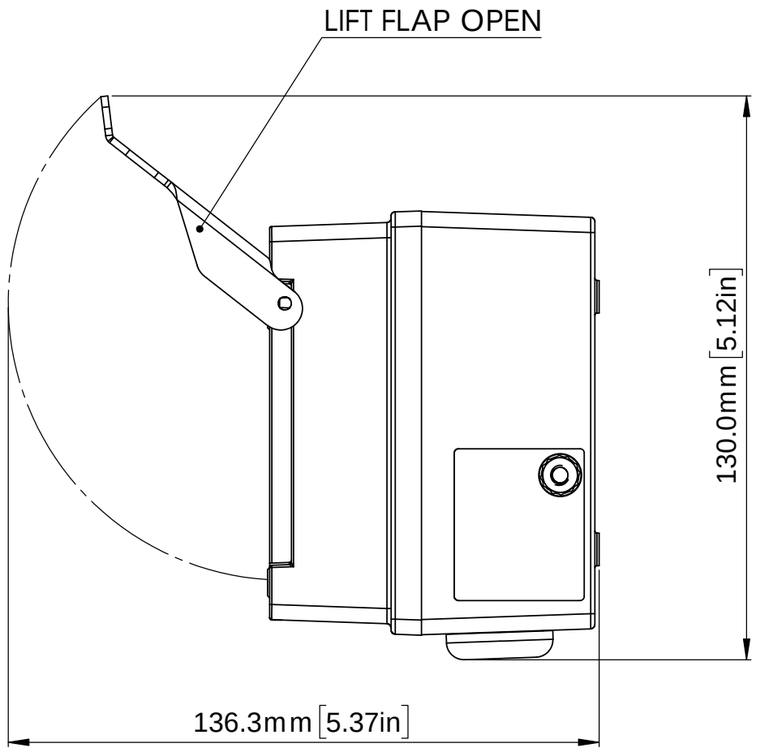

NOTE:

FOR OPTIONAL DUTY LABEL SEE DRAWING D254-00-021
FOR OPTIONAL TAG PLATE SEE DRAWING D254-00-111

DRAWING TO BS8888:2000
GEOMETRIC TOLERANCES TO ISO1101:1983
LINEAR DIMENSIONAL TOLS
ANGULAR DIMENSIONAL TOLS

STANDARDS
BExCP3
IS-CP4

DRAWN	D.HOWGILL	DATE 31-01-20
CHECKED	R.N.POTTS	DATE 31-01-20
APPROVED	R.N.POTTS	DATE 31-01-20

SURFACE FINISH: POWDER COAT
WEIGHT (Kg):
MATERIAL:
ALTERNATIVE MATERIAL:

THIS DRAWING AND ANY INFORMATION OR DESCRIPTIVE MATTER THEREIN IS COMMUNICATED IN CONFIDENCE AND IS THE COPYRIGHT PROPERTY OF EUROPEAN SAFETY SYSTEMS LTD. NEITHER THE WHOLE OR ANY EXTRACT MAY BE DISCLOSED, LOANED, COPIED OR USED FOR MANUFACTURING OR TENDERING PURPOSES WITHOUT THEIR WRITTEN CONSENT.

© EUROPEAN SAFETY SYSTEMS LTD.
AS PER LATEST DATE OF ISSUE SHOWN ABOVE

e2S warning signals
EUROPEAN SAFETY SYSTEMS LTD
IMPRESS HOUSE
MANSELL ROAD
ACTON
LONDON W3 7QH
WWW.E2S.COM

ALL DIMENSIONS IN MM
IF IN DOUBT, ASK - DO NOT SCALE

A2

TITLE BExCP3-BG / IS-CP4-BG BREAK GLASS MANUAL CALL POINT OUTLINE

SCALE 1:1 | SHEET 2 OF 2 | DRAWING NUMBER D150-05-001