INSTRUCTION & SERVICE MANUAL
A105N AlertAlarm Sounder

- -40°C to +66C (-40°F to 151°F)
- Type 4 / 4X / 3R / 13, IP66
- 0.75Kg (1.65lb)
- CE, UKCA, DNV, MED, MER, A105NDC024 CPR compliant
- All units UL Listed

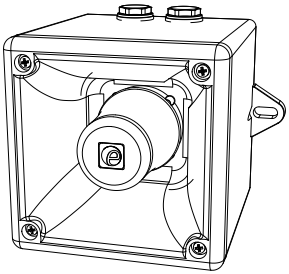

Unit Type Code	Nominal Voltage	Voltage Range	Nominal Current*	Nominal SPL	Max SPL	Average SPL
A105NDC024	12 V dc	10-60Vdc	17mA	105.3dB(A) Tone 44 @ 1m	110.9dB(A) Tone 4 @ 1m	105.2dB(A) All tones @1m
	24V dc		33.5mA			
	48V dc		113mA			
A105NAC230	48V ac	24 - 260Vac / 60-260Vdc	42mA			
	115V ac		25mA			
	230V ac		17mA			

*Nominal current at nominal voltage, Tone 1

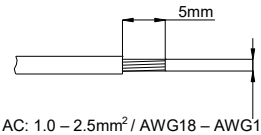

AC: 1.0 – 2.5mm^2 / AWG18 – AWG12

DC: 0.2 – 2.5mm^2 / AWG24 – AWG12

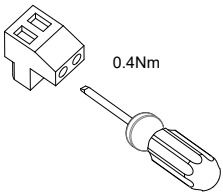

Attention: Installation must be carried out by an electrician in compliance with the latest codes and regulations.
Attention: L'installation doit être effectuée par un électricien conformément aux derniers codes et réglementations.
Achtung: Die Installation muss von einem Elektriker gemäß den neuesten Vorschriften und Bestimmungen durchgeführt werden.
Attenzione: L'installazione deve essere eseguita da un elettricista in conformità con i codici e le normative più recenti.
Atención: La instalación debe ser realizada por un electricista de acuerdo con los últimos códigos y regulaciones.
Atenção: A instalação deve ser realizada por um eletricista de acordo com os códigos e regulamentos mais recentes.
Внимание: установка должна выполняться электриком в соответствии с последними нормами и правилами.

Attention: Disconnect from power source before installation or service to prevent electric shock
Attention: Débranchez-le de la source d'alimentation avant l'installation ou l'entretien pour éviter tout choc électrique.
Achtung: Vor Installation oder Wartung von der Stromquelle trennen, um einen Stromschlag zu vermeiden.
Attenzione: scollegare dall'alimentazione prima dell'installazione o dell'assistenza per evitare scosse elettriche.
Atención: desconéctelo de la fuente de alimentación antes de la instalación o el servicio para evitar descargas eléctricas.
Atenção: Desconecte da fonte de alimentação antes da instalação ou serviço para evitar choque elétrico
Внимание: отключите от источника питания перед установкой или обслуживанием, чтобы предотвратить поражение электрическим током.

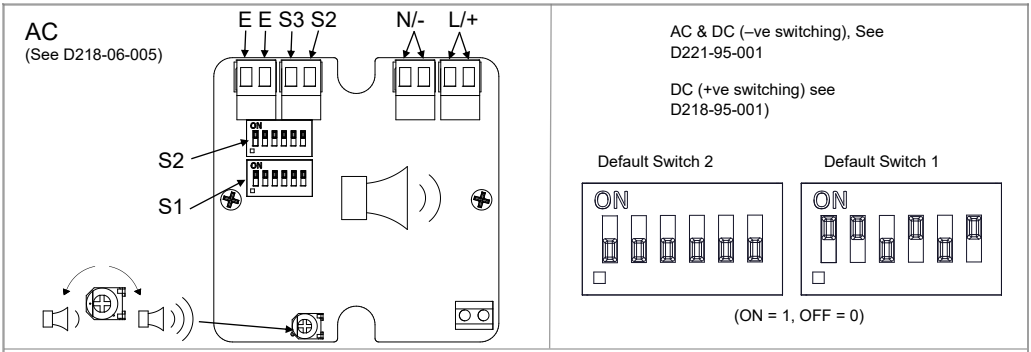

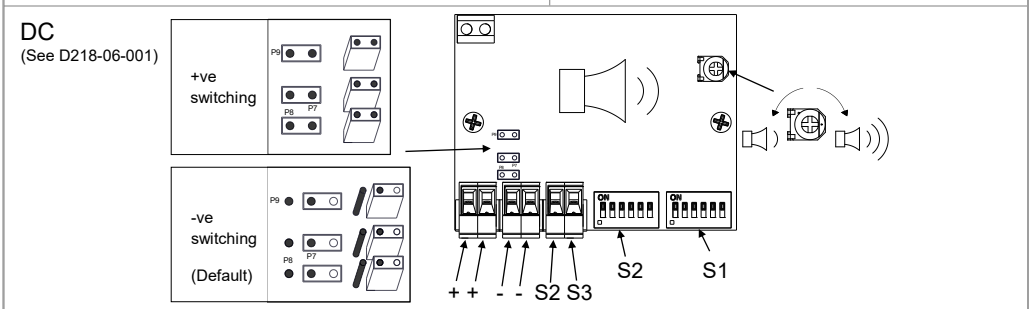

AC Units			
Stage	Alarm tone selection See above Tone table D221-95-001-IS	Wiring Schematic Config. No.	Method of operation as shown in wiring diagram D218-06-005
Stage 1	Use Switch 1 to select Stage 1 alarm tone	1a	Connect Stage 1 Live to terminal 'L/+' and Stage 1 Neutral to terminal 'N/-'
Stage 2	Use Switch 2 to select Stage 2 alarm tone	1b	Connect Stage 1 Live to terminal 'L/+' and Stage 1 Neutral to terminal 'N/-' & connect terminal 'S2' to Stage 1 Live
Stage 3	Pre-determined by Stage 1 selection - see Tone table D221-95-001-IS	1b	Connect Stage 1 Live to terminal 'L/+' and Stage 1 Neutral to terminal 'N/-' & connect terminal 'S3' to Stage 1 Live
Stage 4	Pre-determined by Stage 1 selection - see Tone table D221-95-001-IS	1b	Connect Stage 1 Live to terminal 'L/+' and Stage 1 Neutral to terminal 'N/-' & connect both terminals 'S2' & 'S3' to Stage 1 Live
DC Units			
Stage	Alarm tone selection See above	Wiring Schematic Config. No.	Method of operation as shown in wiring diagram D218-06-001
Common positive (negative switching) mode (Default) Tone table D221-95-001-IS			
Stage 1	Use Switch 1 to select Stage 1 alarm tone	1a	Apply +ve to terminal '+' & -ve to terminal '-'
Stage 2	Use Switch 2 to select Stage 2 alarm tone	1b	Apply +ve to terminal '+' & -ve to terminal '-' and also link terminal S2 to terminal '-'
Stage 3	Pre-determined by Stage 1 selection - see Tone table D221-95-001-IS	1c	Apply +ve to terminal '+' & -ve to terminal '-' and also link terminal S3 to terminal '-'
Stage 4	Pre-determined by Stage 1 selection - see Tone table D221-95-001-IS	1c	Apply +ve to terminal '+' & -ve to terminal '-' and also link S2 and S3 to terminal '-'
Common negative (positive switching) mode - Tone table D218-95-001-IS			
Stage 1	Use Switch 1 to select Stage 1 alarm tone	2a	Apply +ve to terminal S2 & -ve to terminal '-'
Stage 2	Use Switch 2 to select Stage 2 alarm tone	2b	Apply +ve to terminal S3 & -ve to terminal '-'
Stage 3	Pre-determined by Stage 1 selection - see Tone table D218-95-001-IS	2c	Apply +ve to terminal '+' & -ve to terminal '-'

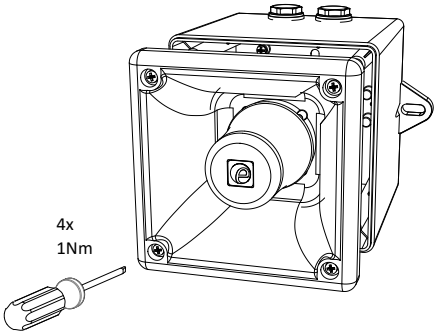
4x
1Nm

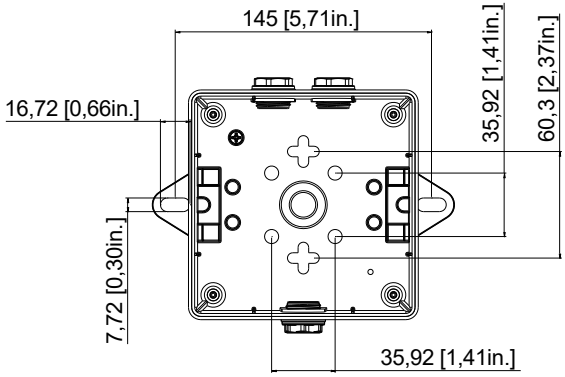
145 [5,71in.]
16,72 [0,66in.]
35,92 [1,41in.]
60,3 [2,37in.]
7,72 [0,30in.]
35,92 [1,41in.]

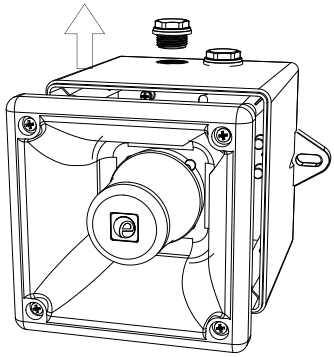

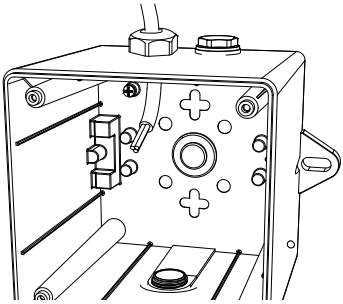

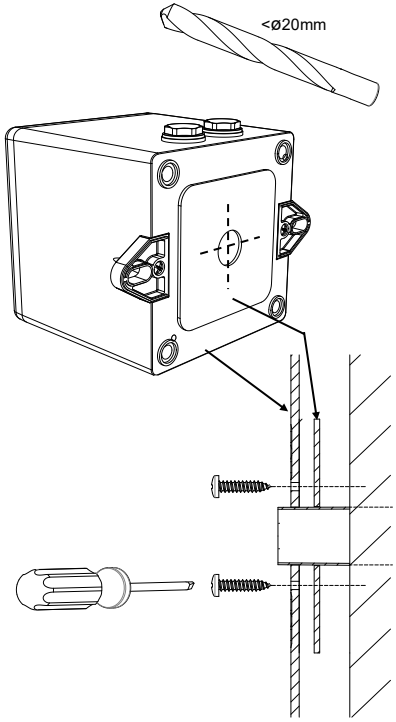
<ø20mm

Construction Product Regulation

- A105NDC024 is compliant to EN54-3:2001+A1+A2
- Alarm devices – Sounder for use in fire detection and fire alarm systems installed in and around buildings
- Type 4 / 4X / 3R / 13, IP66, Independently tested to EN60529:1991, (IP33C Compliant to EN54-3)
- Type B Product, For Indoor & Outdoor use
- Observe Precautions for handling electrostatic devices
- -25°C to +55°C compliant to EN54-3
- Cable Glands must be suitably sealed and meet minimum IP33 for EN54-3 applications
- Storage Temperature: -40°C to +70°C
- Maintenance – None
- Mounting - Units can be mounted using the 2-off ø7mm holes or through the back of the housing using the supplied gasket seal

Order Code: A105NDC024
Voltage Range: 18-60Vdc
Nominal Voltage: 24Vdc / 48Vdc
Max Current: 125mA @ 60Vdc
DOP: DP-2821-CPR-0107
UKCA Cert: 0843-CPR-1005
EU Cert: 2821-CPR-0107

EU S36282 | 21 2821 | UK CA 21 0843

A105NDC024 @ 1m												
	Horizontal Sound Output Max Voltage (60 Vdc) LAFmax,T dB(A)						Horizontal Sound Output Min Voltage (18 Vdc) LAFmax,T dB(A)					
Angle	Tone 44	Tone 8	Tone 2	Tone 21	Tone 31	Tone 5	Tone 44	Tone 8	Tone 2	Tone 21	Tone 31	Tone 5
15°	93.9	94.6	93.7	94	91	91.8	90.8	91.2	90.5	90.9	88	89.1
45°	99.6	101.4	100.1	99.7	96.6	98.2	96.5	98.3	96.9	96.6	93.5	95.7
75°	102.5	103.9	103.5	102.6	102	100.6	100	101.1	100.6	100.1	98.7	98
105°	102.5	103.9	103.4	102.7	102	100.6	100	101.1	100.6	100.3	98.8	98.2
135°	99.5	101.4	100.1	99.7	96.4	98.1	96.4	98.2	96.9	96.6	93.5	95.5
165°	94.1	94.8	93.7	94.1	90.6	91.8	91.1	91.5	90.5	91.1	87.6	89.2
	Vertical Sound Output Max Voltage (60 Vdc) LAFmax,T dB(A)						Vertical Sound Output Min Voltage (18 Vdc) LAFmax,T dB(A)					
Angle	Tone 44	Tone 8	Tone 2	Tone 21	Tone 31	Tone 5	Tone 44	Tone 8	Tone 2	Tone 21	Tone 31	Tone 5
15°	93.8	94.7	93.5	94.3	90.2	91.8	90.7	91.5	90.2	91.2	87.3	89.2
45°	99.6	101.4	100.1	100	96.4	98.3	96.5	98.4	97	96.9	93.4	95.7
75°	103	104.2	103.7	103.2	101.5	100.6	99.8	101.1	100.5	100.1	98.5	98.1
105°	102.6	104.2	103.4	102.6	101.8	100.5	100	101	100.6	100	99	98
135°	99.5	101.4	100.1	99.8	96.4	98.3	96.3	98.2	97	96.6	93.5	95.7
165°	94.3	94.5	93.6	94.6	89.8	91.6	91.2	91.2	90.4	91.5	96.8	88.8

- All models are approved for use as Audible Signal Appliance for use as General Signaling: UL464A & CSA C22.2 No 205-17
- Type 4 / 4X / 3R / 13, IP66
- -40°C to +66°C / -40°C to +151°F
  General Signaling Canada:
  A105NDC024: -40°C to +55°C / -40°F to +131°F
  A105NAC230: -40°C to +40°C / -40°F to +104°F
- To maintain Ingress Protection, cable entries must be fitted with suitably rated cable glands or stopping plugs
- EOL Monitoring (DC Only): End of Line Devices may be fitted between the +ve & -ve terminals of the PCBA. Please ensure that the device legs meet the wire size range stated for the connection terminals and are fitted correctly in order to avoid a short. Refer to the compatible control panel specification for EOL device values and ratings. Note: For forward voltage polarity line monitoring the maximum voltage is 4Vdc. For monitoring voltage, the installer should allow for system cabling and voltage drops

Model	Nominal Voltage	Voltage Range	Nominal Operating Current#	Max Operating RMS*
A105NDC024	12V dc	10 - 60V ac	17mA	125mA
	24V dc		33.5mA	
	48V dc		113mA	
A105NAC230	48V ac	24 - 260V ac 50/60Hz / 60-260V dc	42mA	42.5mA
	115V ac		25mA	
	230V ac		17mA	

*Max Operating current for worst-case input voltage; #Nominal current at nominal voltage and Tone 12

SIL 2 Reliability Data

Reliability and Functional safety IEC/EN61508 which has been assessed and is considered suitable for use in low demand safety function:

1. Random Hardware Failures and Systematic Failures and (route 2_H).

2. As an unvoted item (i.e. hardware fault tolerance of 0) at SIL 2.
The product was assessed against failure modes:

- Failure to sound or annunciate

3. When employing the device in a SIL2 compliant system the user should ensure frequent or continuous automatic
monitoring of continuity and current draw, refer to specific model nominal current draw data.

Integrity in respect of failure to function	SIL2 & SIL1
Total Failure rate	0.3 pmh
"Hazardous" failure rate (revealed)	0 pmh
"Hazardous" failure rate (unrevealed)	0.3 pmh
"Safe" failure rate (revealed)	0 pmh
"Safe" failure rate (unrevealed)	0 pmh
System type	B
Hardware Fault Tolerance	0
Diagnostic Coverage	>80%
PFD (hazardous failure)	1.3×10^{-3}
Proof Test Interval	Up to 1 year

The units have been tested and approved to DNVGL-CG-0339 & EN54-3:2014 incl. A1:2019 for the installation on ships in the following locations:

Temperature:	A, B, C & D (Machinery spaces, control rooms, accommodation, bridge, inside cubicles, desks, etc..., pump rooms, holds, rooms with no heating, Open deck, masts)
Humidity:	A & B (All locations)
Vibration:	A (Bulkheads, Beams, Deck, Bridge)
EMC:	A (All locations except Bridge & open deck)
Enclosure:	A, B & C, IP66 (Control rooms, accommodation, bridge, engine room, open deck masts, below floor plates in engine room)

The units comply with Solas 74 Chapter II-2, Regulation 7 & Chapter X, Regulation 3 for installation on ships in the following locations:

Temperature:	D (Location -25° to +70°C)
Vibration:	A (General Applications)
EMC:	A (General Power Distribution Zone)
Enclosure:	IP66, Salt mist

0575/2024 0097/2024

FIRE INSTRUCTION & SERVICE MANUAL
A105N Range AlertAlarm Sounder UL464 / CAN/ULC-S525
Model: A105NDC

Attention: Installation must be carried out by an electrician in compliance with the National Electrical Code, NFPA 70, and the National Fire Alarm Signaling Code, NFPA 72 or CSA 22.1 Canadian Electrical Code, Part I, Safety Standard for Electrical Installations, Section 32. / L'installation doit exclusivement être réalisée par du personnel qualifié, conformément au code national d'électricité américain, NFPA 70, et le code national d'alarrme incendie et de signalisation NFPA 72 ou CSA 22.1 Code canadien de l'électricité, première partie, norme de sécurité relative aux installations électriques, Section 32

Attention: Disconnect from power source before installation or service to prevent electric shock / Débranchez-le de la source d'alimentation avant l'installation ou l'entretien pour éviter tout choc électrique.

Attention: Do not paint / Ne pas Peinturer

- -40°C to +66°C / -40°F to +151°F
- Units can be mounted using the 2-off ø7mm holes in the mounting lugs or through the back of the housing using the supplied gasket seal.
- A105NDC024 is approved for use as an audible signal appliance for fire alarm use – Public Mode (UL464 & CAN/ULC-S525) and produces a minimum sound pressure level of US: 79.97dB(A) ; CA: 91.2dB(A) at 10 feet (figures @ worst case 10Vdc).
- A105NDC024 produces a minimum sound pressure level of US: 88.8dB(A) ; CA: 99.8dB(A) at 10 feet (@ 24Vdc)
- For Fire Alarm applications, the Sounder Volume must be at the highest setting, (see volume control section). For fire alarmuse, Tone 12 as shown below must be selected:

Stage 1 Set DIP SW 1 Tone No.	Tone Description	Tone Visual	Stage 1 & 2 DIP SW 1/2 Settings 1 2 3 4 5 6	Stage 3 Set DIP SW 1 (S3)	Stage 4 Set DIP SW 1 (S2 + S3)
12	1000Hz(0.5s on, 0.5s off)x3 + 1s gap ISO 8201 Temporal Pattern	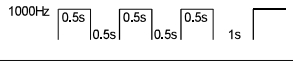	1 1 0 1 0 0	1	8

- Connection Terminals: Pluggable
  AC: 1.0 - 2.5mm^2 / AWG18 - AWG12
  DC: 0.2 - 2.5mm^2 / AWG24 - AWG12
- Terminal Tightening torque 0.4Nm
- To maintain Ingress Protection, cable entries must be fitted with suitably rated cable glands or stopping plugs
- Units can be located indoor or outdoor wet use, wall or ceiling mounted and there are no limitations on orientation
- Factory finishes are not intended to be modified

Surge Current Ratings for use in fire alarm systems

Model	Nominal Voltage	Voltage Range	Initial Peak	Initial RMS
A105NDC024	24V dc	10 - 60V dc	298mA	56.4mA

A105NDC024 Sounder Directional Characteristics for Canadian Fire CAN/ULC-S525 at 10 feet

Horizontal Axis				Vertical Axis			
Angle	OSPL	Angle	OSPL	Angle	OSPL	Angle	OSPL
Ref.90°	101 dB(A)	Ref. 90°	101 dB(A)	Ref. 90°	100.9 dB(A)	Ref. 90°	100.9 dB(A)
113°	-3 dB(A)	67°	-3 dB(A)	113.5°	-3 dB(A)	64°	-3 dB(A)
125°/147°	-6 dB(A)	52°	-6 dB(A)	130°/148°	-6 dB(A)	47°	-6 dB(A)
180°	86.1 dB(A)	0°	86.1 dB(A)	180°	86.5 dB(A)	0°	86.1 dB(A)

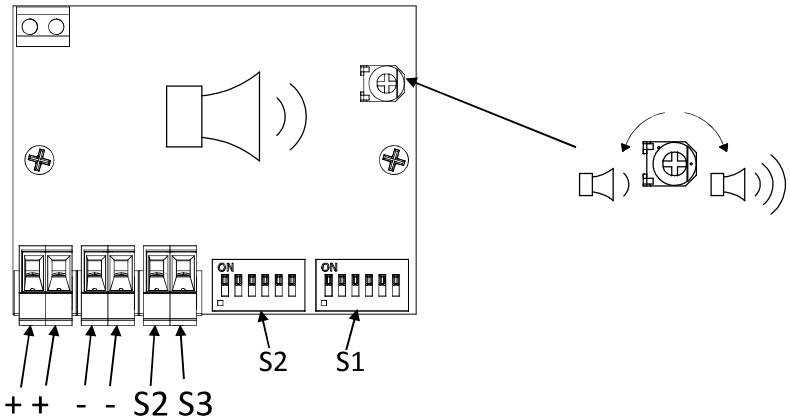

Stage 1 Set DIP SW 1 Tone No.	Tone Description	Tone Visual	Stage 1 & 2 DIP SW 1/2 Settings 1 2 3 4 5 6	Stage 3 Set DIP SW 1 (S3)	Stage 4 Set DIP SW 1 (S2 + S3)
1	1000Hz PFEER Toxic Gas	1000Hz	0 0 0 0 0 0	2	44
2	1200/500Hz @ 1Hz DIN /PFEER P.T.A.P.	1200Hz 500Hz 1s	1 0 0 0 0 0	3	44
3	1000Hz @ 0.5Hz(1s on, 1soff) PFEER Gen. Alarm	1000Hz 1s 1s	0 1 0 0 0 0	2	44
4	1.4KHz-1.6KHz 1s, 1.6KHz-1.4KHz 0.5s NF C 48-265	1600Hz 1400Hz 1s 0.5s	1 1 0 0 0 0	24	1
5	544Hz(100mS)/440Hz (400mS) NF S 32-001	544Hz 440Hz 0.1s 0.4s	0 0 1 0 0 0	19	1
6	1500/500Hz - (0.5s on , 0.5s off) x3 + 1s gap AS4428	1500Hz 500Hz 0.5s 0.5s 0.5s 0.5s 0.5s 1s	1 0 1 0 0 0	44	1
7	500-1500Hz Sweeping 2 sec on 1 sec off AS4428	1500Hz 500Hz 2s 1s	0 1 1 0 0 0	44	1
8	500/1200Hz @ 0.26Hz (3.3son, 0.5s off) Netherlands - NEN 2575	1200Hz 500Hz 3s 0.5s	1 1 1 0 0 0	24	35
9	1000Hz (1s on, 1s off)x7 + (7s on, 1s off) IMO Code 1a	1000Hz 1s 1s 1s 1s 1s 1s 1s 1s 1s 1s 1s 1s 1s 7s 7s	0 0 0 1 0 0	34	1
10	1000Hz (1s on, 1s off)x7 + (7s on, 1s off) IMO Code 1a		1 0 0 1 0 0	34	1
11	420Hz(0.5s on, 0.5s off)x3 + 1s gap ISO 8201 Temporal Pattern	420Hz 0.5s 0.5s 0.5s 0.5s 0.5s 0.5s 1s	0 1 0 1 0 0	1	8
12	1000Hz(0.5s on, 0.5s off)x3 + 1s gap ISO 8201 Temporal Pattern	1000Hz 0.5s 0.5s 0.5s 0.5s 0.5s 0.5s 1s	1 1 0 1 0 0	1	8
13	422/775Hz - (0.85 on, 0.5 off) x3 + 1s gap NFPA - Temporal Coded	775Hz 422Hz 0.85 0.5s 0.85 0.5s 0.85 0.5s 1s	0 0 1 1 0 0	1	8
14	1000/2000Hz @ 1Hz Singapore	2000Hz 1000Hz 0.5s 0.5s	1 0 1 1 0 0	3	35
15	300Hz Continuous (f=300)	f(Hz)	0 1 1 1 0 0	24	35
16	440Hz Continuous (f=440)		1 1 1 1 0 0	24	35
17	470Hz Continuous (f=470)		0 0 0 0 1 0	24	35
18	500Hz Continuous IMO code 2 (Low) (f=500)		1 0 0 0 1 0	24	35
19	554Hz Continuous (f=554)		0 1 0 0 1 0	24	35
20	660Hz Continuous (f=660)		1 1 0 0 1 0	24	35
21	800Hz IMO code 2 (High) (f=800)		0 0 1 0 1 0	24	35
22	1200Hz Continuous (f=1200)		1 0 1 0 1 0	24	35
23	2000Hz Continuous (f=2000)		0 1 1 0 1 0	3	35
24	2400Hz Continuous (f=2400)		1 1 1 0 1 0	20	35
25	440Hz @0.83Hz (50 cycles/minute) Intermittent (f=440, a=0.6, b=0.6)	f(Hz) a(s) b(s)	0 0 0 1 1 0	44	8
26	470Hz @0.9Hz - 1.1s Intermittent (f=470, a=0.55, b=0.55)		1 0 0 1 1 0	44	8
27	470Hz @5Hz - (5 cycles/second) Intermittent (f=470, a=0.1, b=0.1)		0 1 0 1 1 0	44	8
28	544Hz @ 1.14Hz - 0.875s Intermittent (f=470, a=0.43, b=0.44)		1 1 0 1 1 0	24	8
29	655Hz @ 0.875Hz Intermittent (f=655, a=0.57, b=0.57)		0 0 1 1 1 0	44	8
30	660Hz @0.28Hz - 1.8sec on, 1.8sec off Intermittent (f=660, a=1.8, b=1.8)		1 0 1 1 1 0	24	8
31	660Hz @3.34Hz - 150mS on, 150mS off Intermittent (f=660, a=0.15, b=0.15)		0 1 1 1 1 0	24	8
32	745Hz @ 1Hz Intermittent (f=745, a=0.5, b=0.5)		1 1 1 1 1 0	24	8
33	800Hz - 0.25sec on, 1 sec off Intermittent (f=800, a=0.25, b=1)		0 0 0 0 0 1	24	8
34	800Hz @ 2Hz IMO code 3.a (High) Intermittent (f=800, a=0.25, b=0.25)		1 0 0 0 0 1	24	8
35	1000Hz @ 1Hz Intermittent (f=1000, a=0.5, b=0.5)		0 1 0 0 0 1	24	8
36	2400Hz @ 1Hz Intermittent (f=2400, a=0.5, b=0.5)		1 1 0 0 0 1	24	8
37	2900Hz @ 5Hz Intermittent (f=2900, a=0.1, b=0.1)		0 0 1 0 0 1	24	8
38	363/518Hz @ 1Hz Alternating (f=363, f1=518, a=0.1)	f1(Hz) f(Hz) a(s) a(s)	1 0 1 0 0 1	8	19
39	450/500Hz @ 2Hz Alternating (f=450, f1=500, a=0.25)		0 1 1 0 0 1	8	19
40	554/440Hz @ 1Hz Alternating (f=440, f1=554, a=0.5)		1 1 1 0 0 1	24	19
41	554/440Hz @ 0.625Hz Alternating (f=440, f1=554, a=0.8)		0 0 0 1 0 1	8	19
42	561/760Hz @0.83Hz (50 cycles/minute) Alternating (f=561, f1=760, a=0.6)		1 0 0 1 0 1	8	19
43	780/600Hz @ 0.96Hz Alternating (f=600, f1=780, a=0.52)	f1(Hz) f(Hz) a(s) a(s)	0 1 0 1 0 1	8	19
44	800/1000Hz @ 2Hz Alternating (f=800, f1=1000, a=0.25)	f1(Hz) f(Hz) a(s) a(s)	1 1 0 1 0 1	24	19
45	970/800Hz @ 2Hz Alternating (f=800, f1=970, a=0.25)	f1(Hz) f(Hz) a(s) a(s)	0 0 1 1 0 1	8	19
46	800/1000Hz @ 0.875Hz Alternating (f=800, f1=1000, a=0.57)	f1(Hz) f(Hz) a(s) a(s)	1 0 1 1 0 1	24	19
47	2400/2900Hz @ 2Hz Alternating (f=2400, f1=2900, a=0.25)		0 1 1 1 0 1	24	19
48	500/1200Hz @ 0.3Hz Sweeping (f=500, f1=1200, a=3.34)	f1(Hz) f(Hz) a(s)	1 1 1 1 0 1	24	12
49	560/1055Hz @ 0.18Hz Sweeping (f=560, f1=1055, a=5.47)		0 0 0 0 1 1	24	12
50	560/1055Hz @ 3.3Hz Sweeping (f=560, f1=1055, a=0.3)		1 0 0 0 1 1	24	12
51	600/1250Hz @ 0.125Hz Sweeping (f=600, f1=1250, a=8)	f1(Hz) f(Hz) a(s)	0 1 0 0 1 1	24	12
52	660/1200Hz @ 1Hz Sweeping (f=660, f1=1200, a=1)	f1(Hz) f(Hz) a(s)	1 1 0 0 1 1	24	12
53	800/1000Hz @ 1Hz Sweeping (f=800, f1=1000, a=1)		0 0 1 0 1 1	24	12
54	800/1000Hz @ 7Hz Sweeping (f=800, f1=1000, a=0.14)		1 0 1 0 1 1	24	12
55	800/1000Hz @ 50Hz Sweeping (f=800, f1=1000, a=0.02)		0 1 1 0 1 1	24	12
56	2400/2900Hz @ 7Hz Sweeping (f=2400, f1=2900, a=0.14)		1 1 1 0 1 1	24	12
57	2400/2900Hz @ 1Hz Sweeping (f=2400, f1=2900, a=1)		0 0 0 1 1 1	24	12
58	2400/2900Hz @ 50Hz Sweeping (f=2400, f1=2900, a=0.02)		1 0 0 1 1 1	24	12
59	2500/3000Hz @ 2Hz Sweeping (f=2500, f1=3000, a=0.5)		0 1 0 1 1 1	24	12
60	2500/3000Hz @ 7.7Hz Sweeping (f=2500, f1=3000, a=0.13)		1 1 0 1 1 1	24	12
61	800Hz Motor Siren (f=800, a=1.6)	f(Hz) a(s)	0 0 1 1 1 1	24	12
62	1200Hz Motor Siren (f=1200, a=2)		1 0 1 1 1 1	24	
63	2400Hz Motor Siren (f=2400, a=1.7)		0 1 1 1 1 1	24	12
64	Simulated Bell	1450Hz 0.25s 0.69ms	1 1 1 1 1 1	21	12

Tone Reference No.	Tone Description	Tone Visual	Stage 1 Switch 1 Stage 2 Switch 2 Settings 1 2 3 4 5 6	Stage 3 Pre-determined by Stage 1 selection
1	1000Hz PFEER Toxic Gas	1000Hz	0 0 0 0 0 0	44
2	1200/500Hz @ 1Hz DIN /PFEER P.T.A.P.	1200Hz 500Hz 1s	1 0 0 0 0 0	44
3	1000Hz @ 0.5Hz(1s on, 1soff) PFEER Gen. Alarm	1000Hz 1s 1s	0 1 0 0 0 0	44
4	1.4KHz-1.6KHz 1s, 1.6KHz-1.4KHz 0.5s NF C 48-265	1600Hz 1400Hz 1s 0.5s	1 1 0 0 0 0	1
5	544Hz(100mS)/440Hz (400mS) NF S 32-001	544Hz 440Hz 0.1s 0.4s	0 0 1 0 0 0	1
6	1500/500Hz - (0.5s on , 0.5s off) x3 + 1s gap AS4428	1500Hz 500Hz 0.5s 0.5s 0.5s 0.5s 0.5s 1s	1 0 1 0 0 0	1
7	500-1500Hz Sweeping 2 sec on 1 sec off AS4428	1500Hz 500Hz 2s 1s	0 1 1 0 0 0	1
8	500/1200Hz @ 0.26Hz (3.3son, 0.5s off) Netherlands - NEN 2575	1200Hz 500Hz 3s 0.5s	1 1 1 0 0 0	35
9	1000Hz (1s on, 1s off)x7 + (7s on, 1s off) IMO Code 1a	1000Hz 1s 1s 1s 1s 1s 1s 1s 1s 1s 1s 1s 1s 1s 7s 7s	0 0 0 1 0 0	1
10	1000Hz (1s on, 1s off)x7 + (7s on, 1s off) IMO Code 1a		1 0 0 1 0 0	1
11	420Hz(0.5s on, 0.5s off)x3 + 1s gap ISO 8201 Temporal Pattern	420Hz 0.5s 0.5s 0.5s 0.5s 0.5s 0.5s 1s	0 1 0 1 0 0	8
12	1000Hz(0.5s on, 0.5s off)x3 + 1s gap ISO 8201 Temporal Pattern	1000Hz 0.5s 0.5s 0.5s 0.5s 0.5s 0.5s 1s	1 1 0 1 0 0	8
13	422/775Hz - (0.85 on, 0.5 off) x3 + 1s gap NFPA - Temporal Coded	775Hz 422Hz 0.85 0.5s 0.85 0.5s 0.85 0.5s 1s	0 0 1 1 0 0	8
14	1000/2000Hz @ 1Hz Singapore	2000Hz 1000Hz 0.5s 0.5s	1 0 1 1 0 0	35
15	300Hz Continuous (f=300)	f(Hz)	0 1 1 1 0 0	35
16	440Hz Continuous (f=440)		1 1 1 1 0 0	35
17	470Hz Continuous (f=470)		0 0 0 0 1 0	35
18	500Hz Continuous IMO code 2 (Low) (f=500)		1 0 0 0 1 0	35
19	554Hz Continuous (f=554)		0 1 0 0 1 0	35
20	660Hz Continuous (f=660)		1 1 0 0 1 0	35
21	800Hz IMO code 2 (High) (f=800)		0 0 1 0 1 0	35
22	1200Hz Continuous (f=1200)		1 0 1 0 1 0	35
23	2000Hz Continuous (f=2000)		0 1 1 0 1 0	35
24	2400Hz Continuous (f=2400)		1 1 1 0 1 0	35
25	440Hz @0.83Hz (50 cycles/minute) Intermittent (f=440, a=0.6, b=0.6)	f(Hz) a(s) b(s)	0 0 0 1 1 0	8
26	470Hz @0.9Hz - 1.1s Intermittent (f=470, a=0.55, b=0.55)		1 0 0 1 1 0	8
27	470Hz @5Hz - (5 cycles/second) Intermittent (f=470, a=0.1, b=0.1)		0 1 0 1 1 0	8
28	544Hz @ 1.14Hz - 0.875s Intermittent (f=470, a=0.43, b=0.44)		1 1 0 1 1 0	8
29	655Hz @ 0.875Hz Intermittent (f=655, a=0.57, b=0.57)		0 0 1 1 1 0	8
30	660Hz @0.28Hz - 1.8sec on, 1.8sec off Intermittent (f=660, a=1.8, b=1.8)		1 0 1 1 1 0	8
31	660Hz @3.34Hz - 150mS on, 150mS off Intermittent (f=660, a=0.15, b=0.15)		0 1 1 1 1 0	8
32	745Hz @ 1Hz Intermittent (f=745, a=0.5, b=0.5)		1 1 1 1 1 0	8
33	800Hz - 0.25sec on, 1 sec off Intermittent (f=800, a=0.25, b=1)		0 0 0 0 0 1	8
34	800Hz @ 2Hz IMO code 3.a (High) Intermittent (f=800, a=0.25, b=0.25)		1 0 0 0 0 1	8
35	1000Hz @ 1Hz Intermittent (f=1000, a=0.5, b=0.5)		0 1 0 0 0 1	8
36	2400Hz @ 1Hz Intermittent (f=2400, a=0.5, b=0.5)		1 1 0 0 0 1	8
37	2900Hz @ 5Hz Intermittent (f=2900, a=0.1, b=0.1)		0 0 1 0 0 1	8
38	363/518Hz @ 1Hz Alternating (f=363, f1=518, a=0.1)	f1(Hz) f(Hz) a(s) a(s)	1 0 1 0 0 1	19
39	450/500Hz @ 2Hz Alternating (f=450, f1=500, a=0.25)		0 1 1 0 0 1	19
40	554/440Hz @ 1Hz Alternating (f=440, f1=554, a=0.5)		1 1 1 0 0 1	19
41	554/440Hz @ 0.625Hz Alternating (f=440, f1=554, a=0.8)		0 0 0 1 0 1	19
42	561/760Hz @0.83Hz (50 cycles/minute) Alternating (f=561, f1=760, a=0.6)		1 0 0 1 0 1	19
43	780/600Hz @ 0.96Hz Alternating (f=600, f1=780, a=0.52)	f1(Hz) f(Hz) a(s) a(s)	0 1 0 1 0 1	19
44	800/1000Hz @ 2Hz Alternating (f=800, f1=1000, a=0.25)	f1(Hz) f(Hz) a(s) a(s)	1 1 0 1 0 1	19
45	970/800Hz @ 2Hz Alternating (f=800, f1=970, a=0.25)	f1(Hz) f(Hz) a(s) a(s)	0 0 1 1 0 1	19
46	800/1000Hz @ 0.875Hz Alternating (f=800, f1=1000, a=0.57)	f1(Hz) f(Hz) a(s) a(s)	1 0 1 1 0 1	19
47	2400/2900Hz @ 2Hz Alternating (f=2400, f1=2900, a=0.25)		0 1 1 1 0 1	19
48	500/1200Hz @ 0.3Hz Sweeping (f=500, f1=1200, a=3.34)	f1(Hz) f(Hz) a(s)	1 1 1 1 0 1	12
49	560/1055Hz @ 0.18Hz Sweeping (f=560, f1=1055, a=5.47)		0 0 0 0 1 1	12
50	560/1055Hz @ 3.3Hz Sweeping (f=560, f1=1055, a=0.3)		1 0 0 0 1 1	12
51	600/1250Hz @ 0.125Hz Sweeping (f=600, f1=1250, a=8)	f1(Hz) f(Hz) a(s)	0 1 0 0 1 1	12
52	660/1200Hz @ 1Hz Sweeping (f=660, f1=1200, a=1)	f1(Hz) f(Hz) a(s)	1 1 0 0 1 1	12
53	800/1000Hz @ 1Hz Sweeping (f=800, f1=1000, a=1)		0 0 1 0 1 1	12
54	800/1000Hz @ 7Hz Sweeping (f=800, f1=1000, a=0.14)		1 0 1 0 1 1	12
55	800/1000Hz @ 50Hz Sweeping (f=800, f1=1000, a=0.02)		0 1 1 0 1 1	12
56	2400/2900Hz @ 7Hz Sweeping (f=2400, f1=2900, a=0.14)		1 1 1 0 1 1	12
57	2400/2900Hz @ 1Hz Sweeping (f=2400, f1=2900, a=1)		0 0 0 1 1 1	12
58	2400/2900Hz @ 50Hz Sweeping (f=2400, f1=2900, a=0.02)		1 0 0 1 1 1	12
59	2500/3000Hz @ 2Hz Sweeping (f=2500, f1=3000, a=0.5)		0 1 0 1 1 1	12
60	2500/3000Hz @ 7.7Hz Sweeping (f=2500, f1=3000, a=0.13)		1 1 0 1 1 1	12
61	800Hz Motor Siren (f=800, a=1.6)	f(Hz) a(s)	0 0 1 1 1 1	12
62	1200Hz Motor Siren (f=1200, a=2)		1 0 1 1 1 1	
63	2400Hz Motor Siren (f=2400, a=1.7)		0 1 1 1 1 1	12
64	Simulated Bell	1450Hz 0.25s 0.69ms	1 1 1 1 1 1	12

-VE SWITCHING
(DEFAULT)
HEADER PINS P7, P8 & P9 NOT CONNECTED

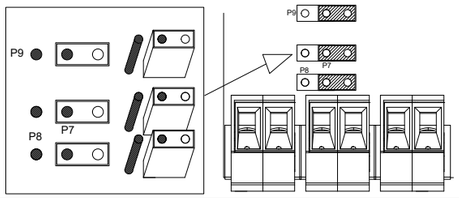

OPTIONAL LINE MONITORING RESISTOR, CUSTOMER SUPPLIED, RECOMMENDED MINIMUM VALUES:
14V MAX SYSTEM = 120Ω MIN, 2W MIN OR 1KΩ MIN, 0.5W MIN
28V MAX SYSTEM = 470Ω MIN, 2W MIN OR 2.4KΩ MIN, 0.5W MIN
R1

ISSUE	MOD No.	REASON - INITIAL - DATE
A		INTRODUCTION RSR - 11/05/2021
B	ACN0154	POSITIVE SWITCHING INTRODUCED RSR - 31/07/2024

Common Positive (-ve Switching) - Default setting

Single Stage Configuration — Config.: 1a

Line Monitoring

Stage 1: Apply Power to Stage 1 +ve & Stage 1 -ve

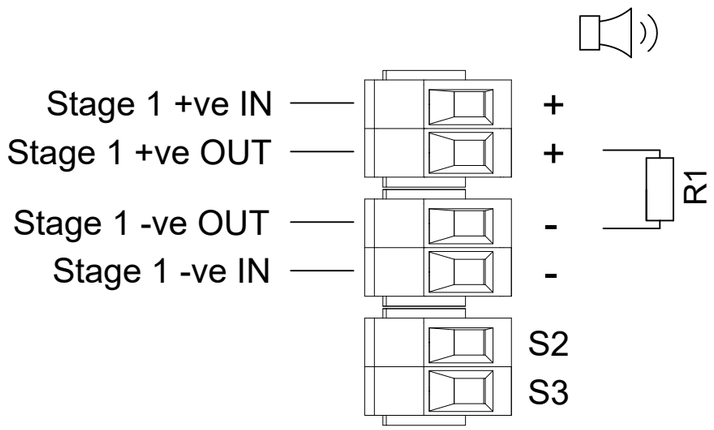

Two Stage Configuration — Config.: 1b

Common Positive (-ve Switching)
Line Monitoring

Stage 1: Apply Power to Common +ve & Stage 1 -ve
Stage 2: Apply Power to Common +ve & Stage 1 -ve & connect Stage 2 -ve to Stage 1 -ve

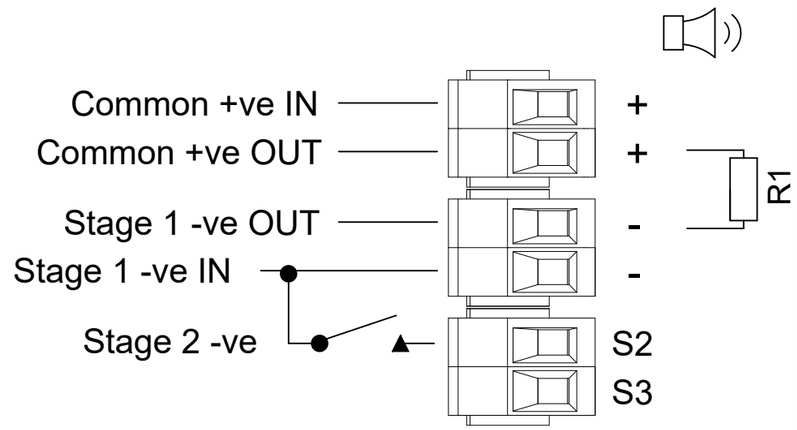

Three/Four Stage Configuration — Config.: 1c

Common Positive (-ve Switching)
Line Monitoring

Stage 1: Apply Power to Common +ve & Stage 1 -ve
Stage 2: Apply Power to Common +ve & Stage 1 -ve & connect Stage 2 -ve to Stage 1 -ve
Stage 3: Apply Power to Common +ve & Stage 1 -ve & connect Stage 3 -ve to Stage 1 -ve
Stage 4: Apply Power to Common +ve & Stage 1 -ve & connect Stage 2 -ve & Stage 3 -ve to Stage 1 -ve

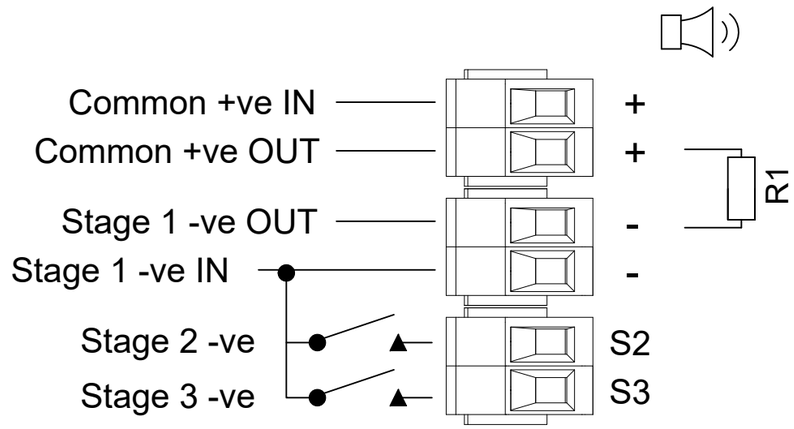

DRAWING TO BS8888:2000
GEOMETRIC TOLERANCES TO ISO1101:1983
LINEAR DIMENSIONAL TOLS
ANGULAR DIMENSIONAL TOLS

STANDARDS
ALERTALARM RANGE

DRAWN	R.S.RAIT	DATE 16/03/2021
CHECKED	B.ISARD	DATE 16/03/2021
APPROVED	R.N.POTTS	DATE 16/03/2021

SURFACE FINISH | WEIGHT (Kg)
MATERIAL
ALTERNATIVE MATERIAL

THIS DRAWING AND ANY INFORMATION OR DESCRIPTIVE MATTER THEREIN IS COMMUNICATED IN CONFIDENCE AND IS THE COPYRIGHT PROPERTY OF EUROPEAN SAFETY SYSTEMS LTD. NEITHER THE WHOLE OR ANY EXTRACT MAY BE DISCLOSED, LOANED, COPIED OR USED FOR MANUFACTURING OR TENDERING PURPOSES WITHOUT THEIR WRITTEN CONSENT.

© EUROPEAN SAFETY SYSTEMS LTD.
AS PER LATEST DATE OF ISSUE SHOWN ABOVE

e2S warning signals
EUROPEAN SAFETY SYSTEMS LTD
IMPRESS HOUSE
MANSELL ROAD
ACTON
LONDON W3 7QH
WWW.E2S.COM

ALL DIMENSIONS IN MM
IF IN DOUBT, ASK - DO NOT SCALE

A3

TITLE A100, A105N & D105 DC SOUNDER WIRING DIAGRAMS

SCALE	SHEET	DRAWING NUMBER
NTS	1 OF 2	D218-06-001

+VE SWITCHING
CUSTOMER TO MOVE HEADER PINS P7, P8 & P9 SO THEY ARE CONNECTED

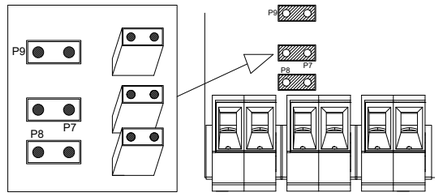

OPTIONAL LINE MONITORING RESISTOR, CUSTOMER SUPPLIED, RECOMMENDED MINIMUM VALUES:
14V MAX SYSTEM = 120Ω MIN, 2W MIN OR 1KΩ MIN, 0.5W MIN
28V MAX SYSTEM = 470Ω MIN, 2W MIN OR 2.4KΩ MIN, 0.5W MIN
R1

ISSUE	MOD No.	REASON - INITIAL - DATE
A		INTRODUCTION RSR - 11/05/2021
B	ACN0154	POSITIVE SWITCHING INTRODUCED RSR - 31/07/2024

Common Negative (+ve Switching) - Installer to set Header Pins P7, P8 & P9 as shown above

Stage 1 Configuration	Config.: 2a	Stage 2 Configuration	Config.: 2b	Stage 3 Configuration	Config.: 2c
Common Negative (+ve Switching) Single Stage Line Monitoring, Maximum Monitoring Voltage 4Vdc Not to be used for reverse polarity line monitoring		Common Negative (+ve Switching) Single Stage Line Monitoring, Maximum Monitoring Voltage 4Vdc Not to be used for reverse polarity line monitoring		Common Negative (+ve Switching) Single Stage Line Monitoring, Maximum Monitoring Voltage 4Vdc Not to be used for reverse polarity line monitoring	
Stage 1: Apply Stage 1 +ve to terminal 'S2' & Common -ve to terminal '-'		Stage 2: Apply Stage 2 +ve to terminal 'S3' & Common -ve to terminal '-'		Stage 3: Apply Stage 3 +ve to terminal '+' & Common -ve to terminal '-'	

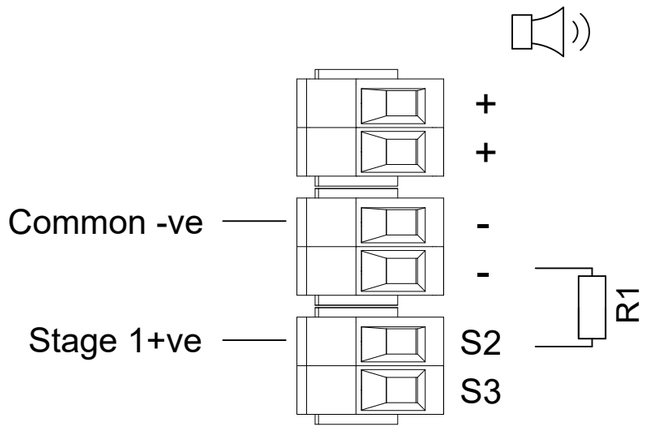

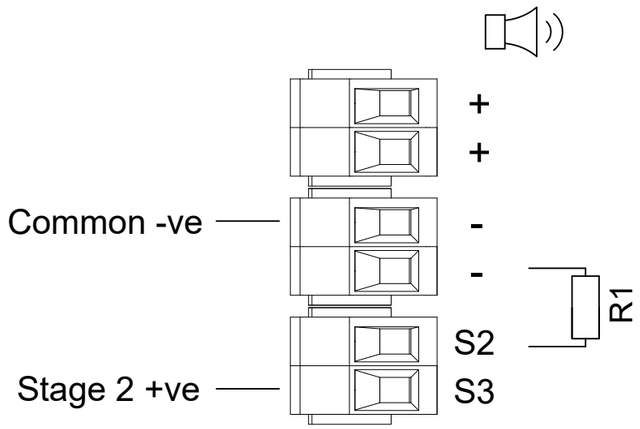

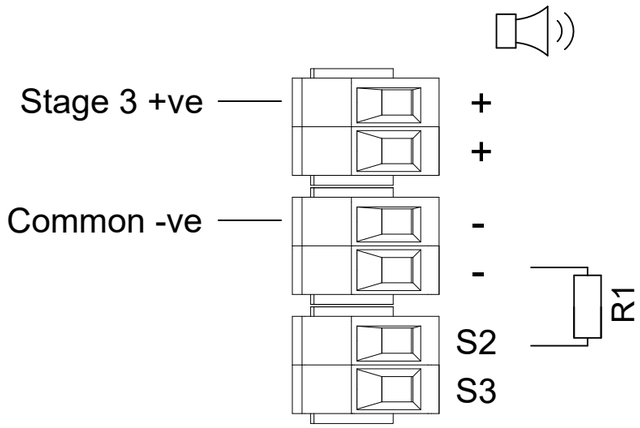

DRAWING TO BS8888:2000
GEOMETRIC TOLERANCES TO ISO1101:1983
LINEAR DIMENSIONAL TOLS
ANGULAR DIMENSIONAL TOLS

STANDARDS
ALERTALARM RANGE

DRAWN	R.S.RAIT	DATE 16/03/2021
CHECKED	B.ISARD	DATE 16/03/2021
APPROVED	R.N.POTTS	DATE 16/03/2021

SURFACE FINISH | WEIGHT (Kg)
MATERIAL
ALTERNATIVE MATERIAL

THIS DRAWING AND ANY INFORMATION OR DESCRIPTIVE MATTER THEREIN IS COMMUNICATED IN CONFIDENCE AND IS THE COPYRIGHT PROPERTY OF EUROPEAN SAFETY SYSTEMS LTD. NEITHER THE WHOLE OR ANY EXTRACT MAY BE DISCLOSED, LOANED, COPIED OR USED FOR MANUFACTURING OR TENDERING PURPOSES WITHOUT THEIR WRITTEN CONSENT.

© EUROPEAN SAFETY SYSTEMS LTD.
AS PER LATEST DATE OF ISSUE SHOWN ABOVE

e2S warning signals
EUROPEAN SAFETY SYSTEMS LTD
IMPRESS HOUSE
MANSELL ROAD
ACTON
LONDON W3 7QH
WWW.E2S.COM

ALL DIMENSIONS IN MM
IF IN DOUBT, ASK - DO NOT SCALE

A3

TITLE A100, A105N & D105 DC SOUNDER WIRING DIAGRAMS

SCALE	SHEET	DRAWING NUMBER
NTS	2 OF 2	D218-06-001

ISSUE	MOD No.	REASON - INITIAL - DATE
A		INTRODUCTION RSR - 16/04/2021
B		TERMINATIONS CLARIFIED RSR - 02/02/2022

SWITCHES FOR STAGE OPERATION
CUSTOMER SUPPLIED

Single Stage Configuration — Config.: 1a

Stage 1: Connect Stage 1 Live to terminal 'L/+' & Stage 1 Neutral to terminal 'N/-'

Three/Four Stage Configuration — Config.: 1b

Stage 1: Connect Stage 1 Live to terminal 'L/+' & Stage 1 Neutral to terminal 'N/-'
Stage 2: Connect Stage 1 Live to terminal 'L/+' & Stage 1 Neutral to terminal 'N/-' and link terminal 'S2' to Stage 1 Live
Stage 3: Connect Stage 1 Live to terminal 'L/+' & Stage 1 Neutral to terminal 'N/-' and link terminal 'S3' to Stage 1 Live
Stage 4: Connect Stage 1 Live to terminal 'L/+' & Stage 1 Neutral to terminal 'N/-' and link both terminals 'S2' & 'S3' to Stage 1 Live

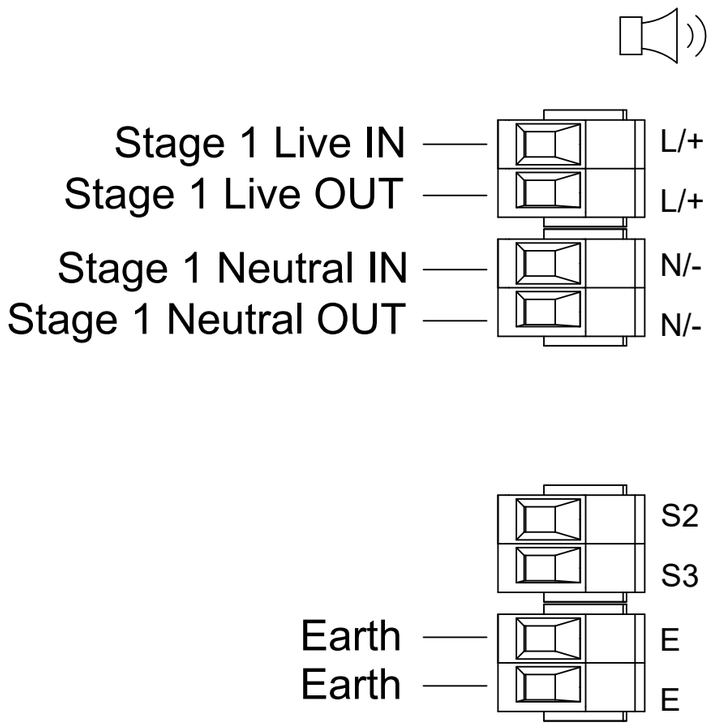

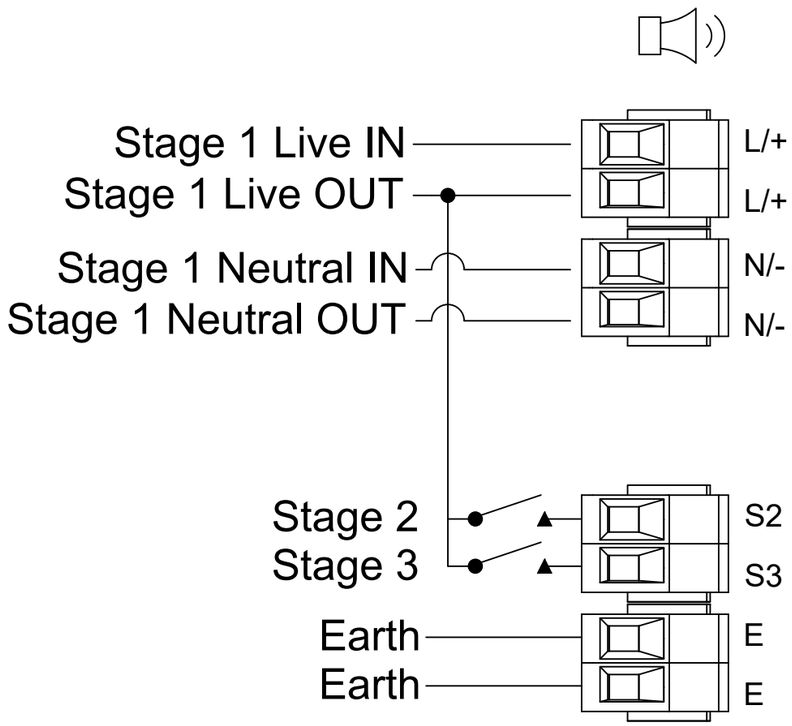

DRAWING TO BS8888:2000 GEOMETRIC TOLERANCES TO ISO1101:1983 LINEAR DIMENSIONAL TOLS ANGULAR DIMENSIONAL TOLS	DRAWN R.S.RAIT	DATE 16/03/2021	SURFACE FINISH / WEIGHT (Kg)
STANDARDS ALERTALARM RANGE	CHECKED B.ISARD	DATE 16/03/2021	MATERIAL
	APPROVED R.N.POTTS	DATE 16/03/2021	ALTERNATIVE MATERIAL

THIS DRAWING AND ANY INFORMATION OR DESCRIPTIVE MATTER THEREIN IS COMMUNICATED IN CONFIDENCE AND IS THE COPYRIGHT PROPERTY OF EUROPEAN SAFETY SYSTEMS LTD. NEITHER THE WHOLE OR ANY EXTRACT MAY BE DISCLOSED, LOANED, COPIED OR USED FOR MANUFACTURING OR TENDERING PURPOSES WITHOUT THEIR WRITTEN CONSENT.

© EUROPEAN SAFETY SYSTEMS LTD.
AS PER LATEST DATE OF ISSUE SHOWN ABOVE

e2S warning signals
EUROPEAN SAFETY SYSTEMS LTD
IMPRESS HOUSE
MANSELL ROAD
ACTON
LONDON W3 7QH
WWW.E2S.COM

ALL DIMENSIONS IN MM
IF IN DOUBT, ASK - DO NOT SCALE

A3

TITLE A100, A105N & D105 AC WIRING DIAGRAMS

SCALE	SHEET	DRAWING NUMBER
NTS	1 OF 1	D218-06-005

Page left Intentionally blank

Page left Intentionally blank